XLED PRO ONE S with motion detector - white

SENSOR-SWITCHED LED FLOODLIGHT

EAN 4007841086848

- Remote control RC12 included
- Smart Remote remote control optional

182 x 229 x 230 mm



XLED PRO ONE S with motion detector - white

SENSOR-SWITCHED LED FLOODLIGHT

EAN 4007841086848

Technical Data

DIMENSIONS

Dimensions L × W × H	182 x 229 x 230 mm

ELECTRICAL

Mains connection	230 V / 50 – 60 Hz
Power	18,4 W
LED lamps < 2 W	16 W
LED lamps > 2 W < 8 W	64 W
LED lamps > 8 W	64 W
Capacitive load in µF	88 µF

SENSOR TECHNOLOGY

Max. mounting height	6,00 m
Sensor technology	passive infrared
With motion detector	Yes
Opening angle	180 °
Sneak-under protection	Yes
Segment-by-segment masking	No
Electronic scalability	No
Mechanical scalability	No
Radial range	r = 3 m (19 m²)
Tangential range	r = 10 m (209 m²)
Mounting height	1,8 – 6,0 m
Optimal mounting height	2,0 m

CONNECTIVITY

Networking	Yes
Type of networking	Master/Slave
Slave mode adjustable	No
Networking via	Cable

LIGHTING TECHNOLOGY

Measured luminous flux 360°	2204 lm
Colour temperature	3000 K
LED colour deviation	SDCM3
Colour rendering index	80 - 89
With illuminant	Yes, STEINEL LED system
Illuminant	LED cannot be replaced
Base	without
LED cooling system	Passive Thermo Control
Soft light start	Yes

LIFETIME

LED lifetime L70B50 25°C	> 36000 h

SETTINGS

Twilight switch	Yes
Twilight setting	2 – 2000 lx
Time setting	8 s – 35 min
Base light function	Yes
Base light function time	10/30 Min., ganze Nacht
Main light adjustable	No
Functions	DIM-FunktionLichtsensorBewegungssensorOrientierungslicht
Settings via	Remote control, Potentiometers, Smart Remote
Twilight setting teach	Yes
Base light function in percent	10 %
Base light function percent from	10 %

HOUSING & MATERIAL

Impact resistance	IK03
Protection class (IP)	IP44
Protection class	I
Ambient temperature	-20...+40 °C
Housing material	Aluminium
Cover material	Clear glass
Cover material (scope of delivery)	Cover clips
Mounting location	ceiling, wall
Application location	Outdoors
Mounting type	Surface mounting
Application room	Aussenbereich, Garten, Hauseingang, Hof & Einfahrt, Rund ums Haus
Colour	White

SCOPE OF DELIVERY & WARRANTY

Manufacturer warranty	5 years
Corner wall bracket included	No

CERTIFICATES & EPREL

EPREL category	Light source

XLED PRO ONE S with motion detector - white

EAN 4007841086848

SENSOR-SWITCHED LED FLOODLIGHT

Illustrations

TECHNICAL DRAWINGS

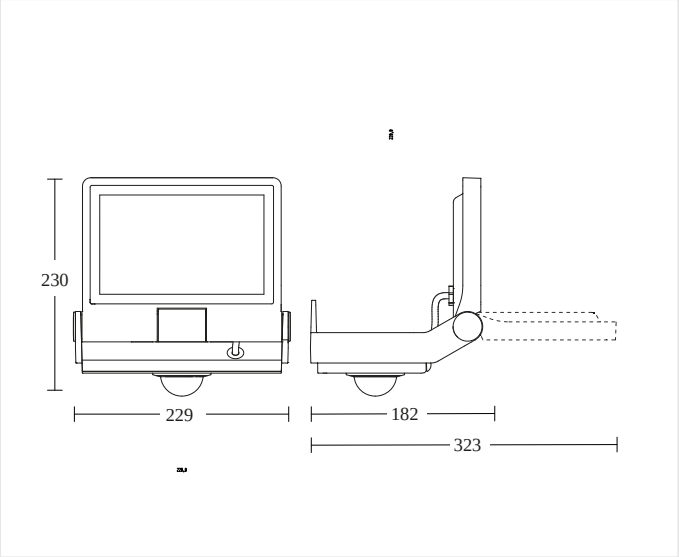

182 x 229 x 230 mm

MOUNTING HEIGHT

1,8 – 6,0 m	2,0 m	6,00 m
BEREICH	OPTIMAL	MAX

XLED PRO ONE S with motion detector - white

EAN 4007841086848

SENSOR-SWITCHED LED FLOODLIGHT

Wiring Diagrams

WIRING DIAGRAM 1

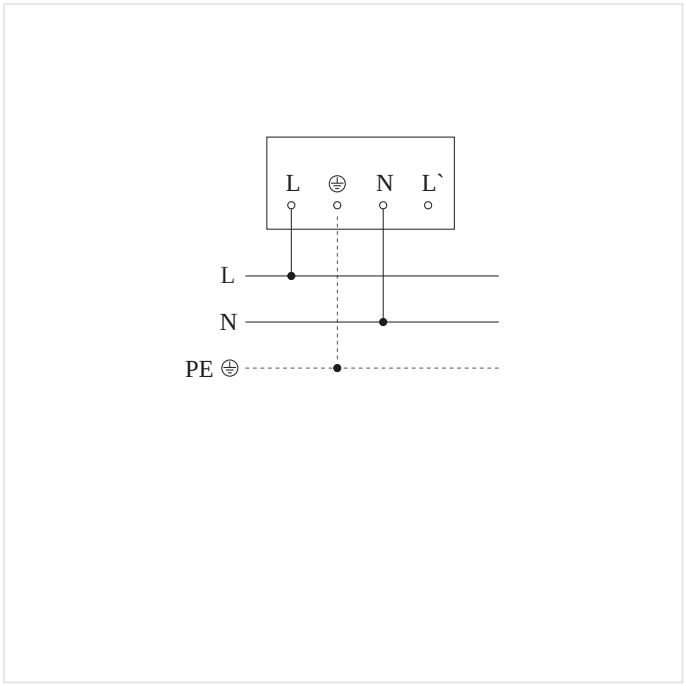

Master circuit diagram

WIRING DIAGRAM 2

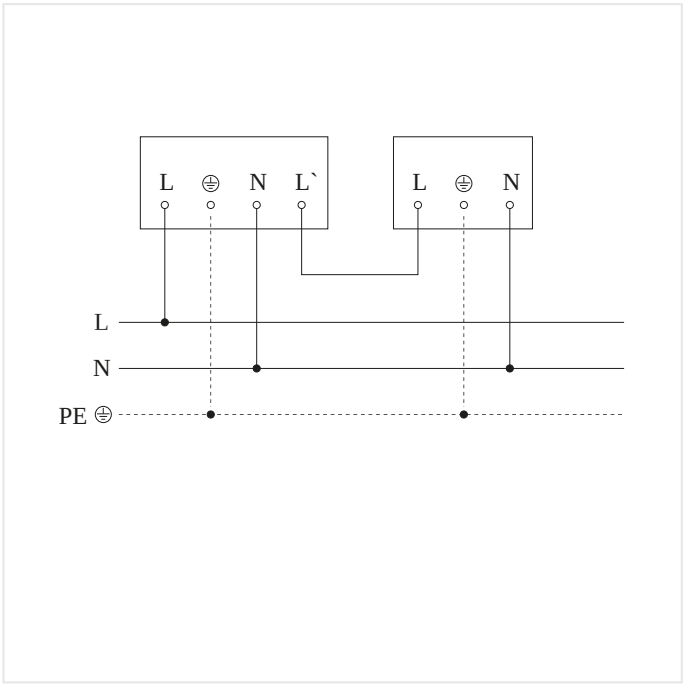

Master/slave interconnection circuit diagram

XLED PRO ONE S with motion detector - white

SENSOR-SWITCHED LED FLOODLIGHT

EAN 4007841086848

Accessories

	ARTICLE NUMBER	DESCRIPTION	CATEGORY
	4007841080990	**Aufputz-Adapter XLED PRO ONE anthrazit**	Accessory
	4007841079000	**RC 12**	Accessory

ORDERING INFORMATION

Art.-Nr.	4007841086848
EAN	4007841086848
Typ	**XLED PRO ONE S with motion detector - white**

nevalux AG
Neugrütstrasse 2
8610 Uster
+41 44 508 78 78
info@nevalux.swiss