XLED PRO ONE Plus without motion detector - white

LED FLOODLIGHT WITHOUT SENSOR

EAN 4007841086800

- Floodlight redefined. The XLED PRO ONE floodlight without sensor, which can be swivelled vertically through 180° and comes in a stylish aluminium housing, ensures daylight illumination of large areas with warm white 3000 K and 4370 lm at 33,1 W. Suitable for manual switch operation and for cable-based networking in conjunction with a sensor version. With optional surface-mounted adapter. Available in white or anthracite. 5-year guarantee.

steinel

202 x 259 x 226 mm



XLED PRO ONE Plus without motion detector - white

LED FLOODLIGHT WITHOUT SENSOR

EAN 4007841086800

Technical Data

DIMENSIONS

Dimensions L × W × H	202 x 259 x 226 mm

ELECTRICAL

Mains connection	230 V / 50 – 60 Hz
Power	33,1 W

SENSOR TECHNOLOGY

With motion detector	No

CONNECTIVITY

Networking	Yes
Networking via	Cable

LIGHTING TECHNOLOGY

Measured luminous flux 360°	4370 lm
Colour temperature	3000 K
LED colour deviation	SDCM3
Colour rendering index	80 - 89
With illuminant	Yes, STEINEL LED system
Illuminant	LED cannot be replaced
Base	without
LED cooling system	Passive Thermo Control

LIFETIME

LED lifetime L70B50 25°C	> 36000 h

SETTINGS

Twilight switch	No
Base light function	No
Main light adjustable	No
Functions	Relay output
Twilight setting teach	No

HOUSING & MATERIAL

Impact resistance	IK03
Protection class (IP)	IP44
Protection class	I
Ambient temperature	-20...+40 °C
Housing material	Aluminium
Cover material	Clear glass
Cover material (scope of delivery)	Cover clips
Mounting location	ceiling, wall
Application location	Outdoors
Mounting type	Surface mounting
Application room	all round the building, courtyard & driveway, front door, garden, outdoors
Colour	White

SCOPE OF DELIVERY & WARRANTY

Manufacturer warranty	5 years
Corner wall bracket included	No

CERTIFICATES & EPREL

EPREL category	Light source

XLED PRO ONE Plus without motion detector - white

EAN 4007841086800

LED FLOODLIGHT WITHOUT SENSOR

Illustrations

TECHNICAL DRAWINGS

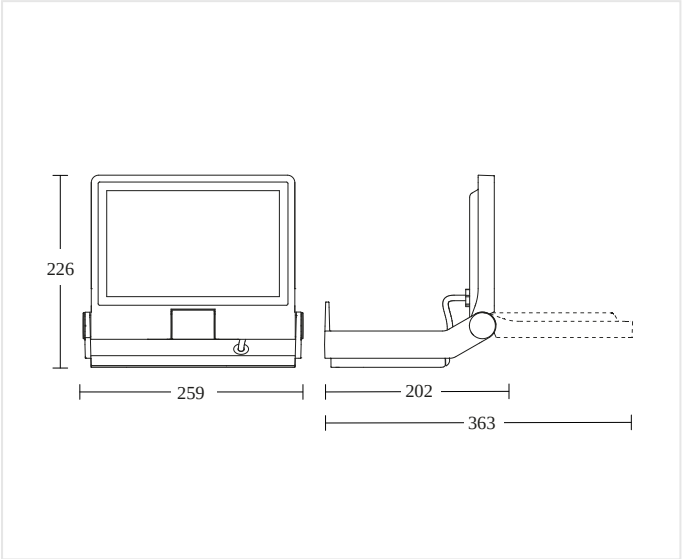

202 x 259 x 226 mm

XLED PRO ONE Plus without motion detector - white

EAN 4007841086800

LED FLOODLIGHT WITHOUT SENSOR

Wiring Diagrams

WIRING DIAGRAM 1

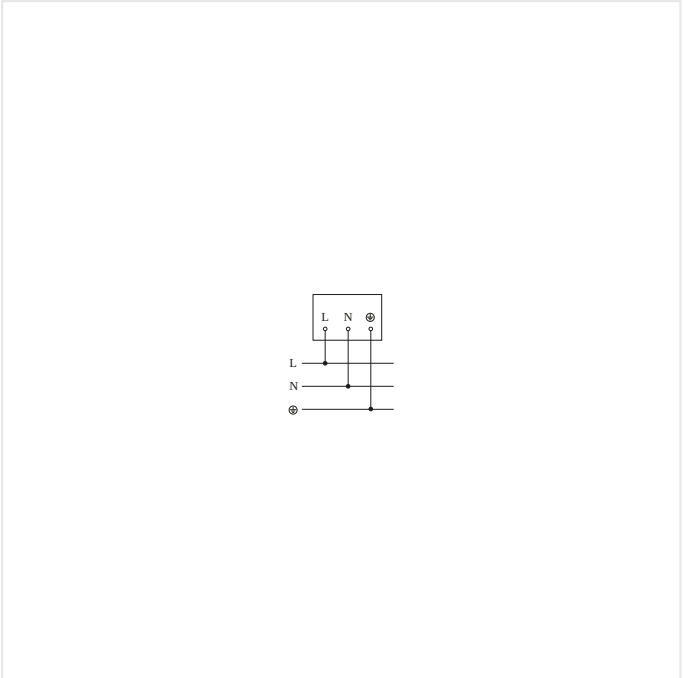

Slave circuit diagram

WIRING DIAGRAM 2

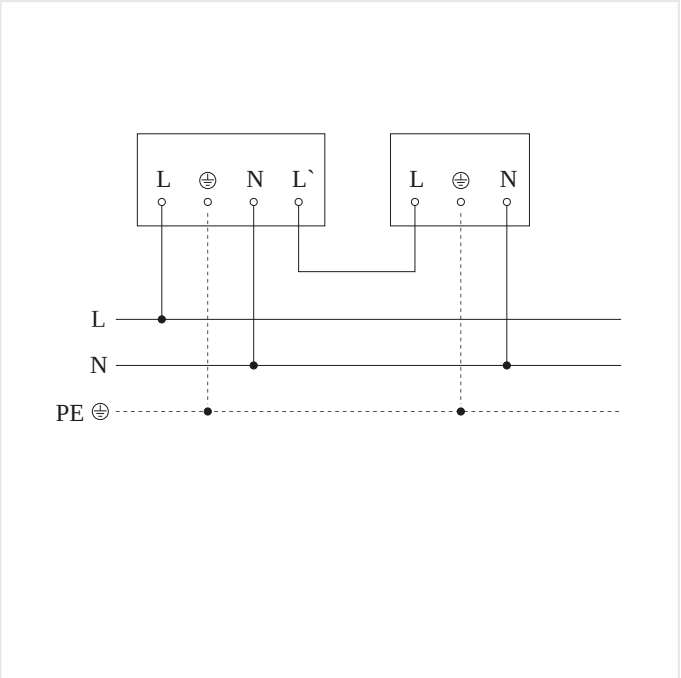

Master/slave interconnection circuit diagram

XLED PRO ONE Plus without motion detector - white

EAN 4007841086800

LED FLOODLIGHT WITHOUT SENSOR

Accessories

	ARTICLE NUMBER	DESCRIPTION	CATEGORY
	4007841080983	**Aufputz-Adapter XLED PRO ONE Plus + Max anthrazit**	Accessory
	4007841079000	**RC 12**	Accessory

ORDERING INFORMATION

Art.-Nr.	4007841086800
EAN	4007841086800
Typ	**XLED PRO ONE Plus without motion detector - white**

neva lux

nevalux AG
Neugrütstrasse 2
8610 Uster
+41 44 508 78 78
info@nevalux.swiss