IS 130-2 Silver

MOTION DETECTOR

EAN 4007841660116
E-Nr. 535996860

- UV-resistant plastic

steinel

87 x 78 x 110 mm



IS 130-2 Silver

MOTION DETECTOR

EAN **4007841660116**
E-Nr. **535996860**

Technical Data

IDENTIFICATION

Version	**Motion detectors**

DIMENSIONS

Dimensions L × W × H	**87 x 78 x 110 mm**

ELECTRICAL

Mains connection	**230 V / 50 – 60 Hz**
Power	**600 W**
Switching output 1 resistive	**600 W**
Fluorescent lamps ECG	**430 W**
Fluorescent lamps uncompensated	**500 VA**
Fluorescent lamps series-compensated	**500 VA**
Fluorescent lamps parallel-compensated	**500 VA**
Switching output 1 low-voltage halogen lamps	**500 VA**
LED lamps < 2 W	**16 W**
LED lamps > 2 W < 8 W	**64 W**
LED lamps > 8 W	**64 W**
Capacitive load in µF	**88 µF**
Switching output 1 number of LED/fluorescent lamps	**4 pcs.**

SENSOR TECHNOLOGY

Max. mounting height	**3,00 m**
Sensor technology	**passive infrared**
Detection angle	**130 °**
Opening angle	**40 °**
Sneak-under protection	**Yes**
Segment-by-segment masking	**Yes**
Electronic scalability	**No**
Mechanical scalability	**No**
Radial range	**r = 3 m (10 m²)**
Tangential range	**r = 12 m (163 m²)**
Switching zones	**260 switching zones**
Mounting height	**1,8 – 3,0 m**
Optimal mounting height	**2,0 m**

CONNECTIVITY

Networking	**Yes**
Type of networking	**Master/Master**
Networking via	**Cable**

LIGHTING TECHNOLOGY

Soft light start	**No**
Continuous light	**selectable**
Constant light regulation	**No**

SETTINGS

Twilight switch	**Yes**
Twilight setting	**2 – 2000 lx**
Time setting	**8 s – 35 min**
Base light function	**No**
Main light adjustable	**No**
Settings via	**Potentiometers**
With remote control	**No**
Twilight setting teach	**No**

HOUSING & MATERIAL

Protection class (IP)	**IP54**
Ambient temperature	**-20...+50 °C**
Mounting location	**Wall**
Application location	**Indoors, Outdoors**
Mounting type	**Surface mounting**
Material	**Plastic**
Application room	**all round the building, courtyard & driveway, front door, outdoors, terrace / balcony**
Colour	**Silver**
RAL colour	**9006**

SCOPE OF DELIVERY & WARRANTY

Manufacturer warranty	**3 years**
Corner wall bracket included	**No**

IS 130-2 Silver

MOTION DETECTOR

EAN **4007841660116**
E-Nr. **535996860**

Illustrations

TECHNICAL DRAWINGS

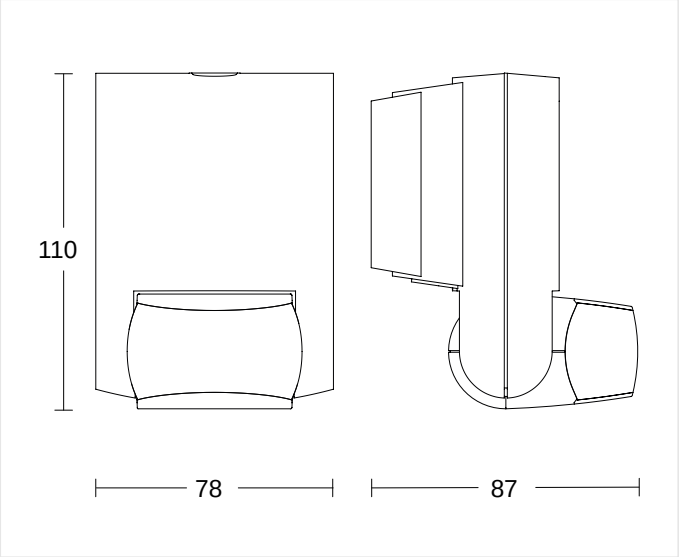

87 x 78 x 110 mm

MOUNTING HEIGHT

1,8 – 3,0 m	2,0 m	3,00 m
BEREICH	OPTIMAL	MAX

IS 130-2 Silver

MOTION DETECTOR

EAN **4007841660116**
E-Nr. **535996860**

Wiring Diagrams

WIRING DIAGRAM 1

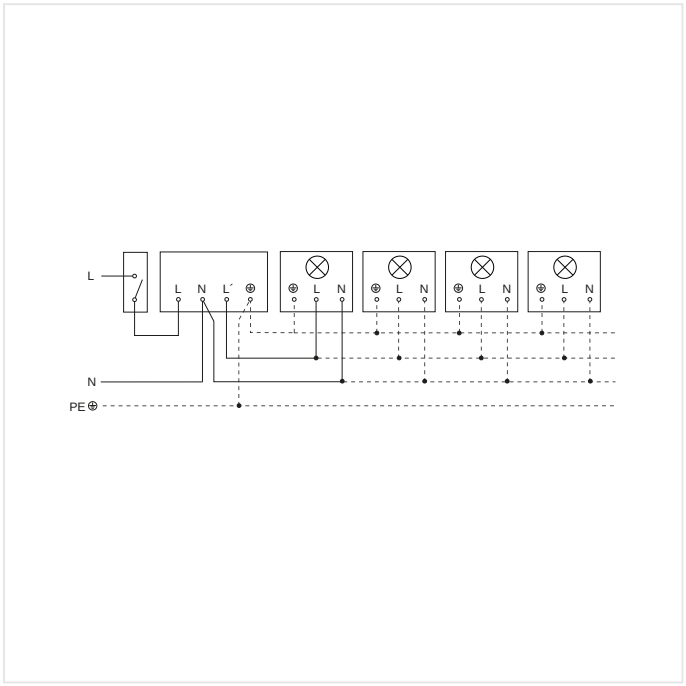

Light without neutral conductor

WIRING DIAGRAM 2

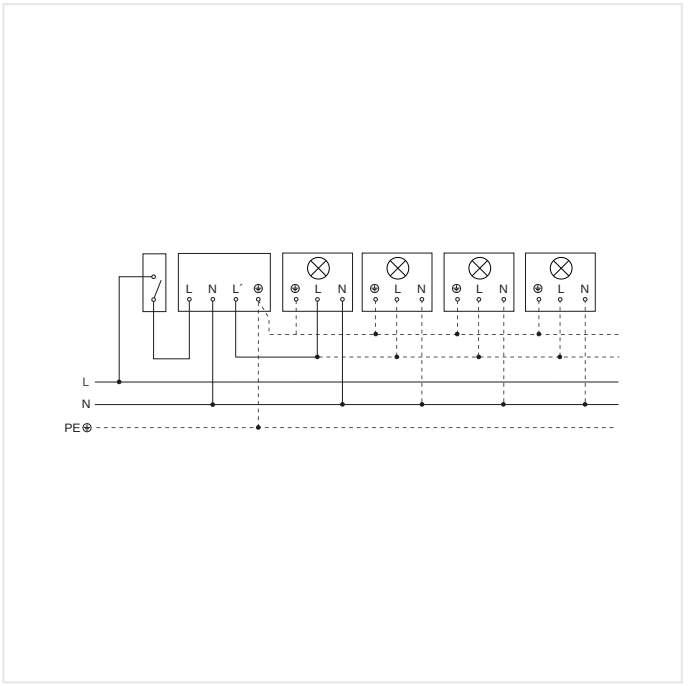

Light with neutral conductor

IS 130-2 Silver

MOTION DETECTOR

EAN **4007841660116**
E-Nr. **535996860**

Accessories

ORDERING INFORMATION

Art.-Nr.	4007841660116
EAN	4007841660116
E-Number	535996860
Typ	**IS 130-2 Silver**

neva
lux

nevalux AG
Neugrütstrasse 2
8610 Uster
+41 44 508 78 78
info@nevalux.swiss