IS 2180-2 inox

MOTION DETECTOR

EAN 4007841603915
E-Nr. 535996670

- UV-resistant plastic
- Optional corner wall mount bracket

steinel

55 x 78 x 120 mm



IS 2180-2 inox

MOTION DETECTOR

EAN 4007841603915
E-Nr. 535996670

Technical Data

IDENTIFICATION

Version	Motion detectors

DIMENSIONS

Dimensions L × W × H	55 x 78 x 120 mm

ELECTRICAL

Mains connection	230 V / 50 – 60 Hz
Power	1000 W
Switching output 1 resistive	1000 W
Fluorescent lamps ECG	350 W
Fluorescent lamps uncompensated	500 VA
Fluorescent lamps series-compensated	900 VA
Fluorescent lamps parallel-compensated	500 VA
Switching output 1 low-voltage halogen lamps	1000 VA
LED lamps < 2 W	100 W
LED lamps > 2 W < 8 W	175 W
LED lamps > 8 W	350 W
Capacitive load in µF	132 µF

SENSOR TECHNOLOGY

Max. mounting height	4,00 m
Sensor technology	passive infrared
Detection angle	180 °
Opening angle	90 °
Sneak-under protection	Yes
Segment-by-segment masking	Yes
Electronic scalability	No
Mechanical scalability	No
Radial range	r = 1.5 m (4 m²) / r = 3 m (14 m²)
Tangential range	r = 5 m (39 m²) / r = 12 m (226 m²)
Detection planes	10
Switching zones	504 switching zones
Mounting height	1,8 – 4,0 m
Optimal mounting height	2,0 m

CONNECTIVITY

Networking	Yes
Type of networking	Master/Master
Networking via	Cable

LIGHTING TECHNOLOGY

Soft light start	No
Continuous light	selectable
Constant light regulation	No

SETTINGS

Twilight switch	Yes
Twilight setting	2 – 2000 lx
Time setting	5 s – 15 min
Base light function	No
Main light adjustable	No
Settings via	Potentiometers
With remote control	No
Twilight setting teach	No

HOUSING & MATERIAL

Protection class (IP)	IP54
Ambient temperature	-20…+50 °C
Mounting location	corner, wall
Application location	Indoors, Outdoors
Mounting type	Surface mounting
Material	Plastic
Application room	all round the building, courtyard & driveway, front door, outdoors, terrace / balcony
Colour	Silver
RAL colour	9006

SCOPE OF DELIVERY & WARRANTY

Manufacturer warranty	5 years
Corner wall bracket included	No

IS 2180-2 inox

MOTION DETECTOR

EAN **4007841603915**
E-Nr. **535996670**

Illustrations

TECHNICAL DRAWINGS

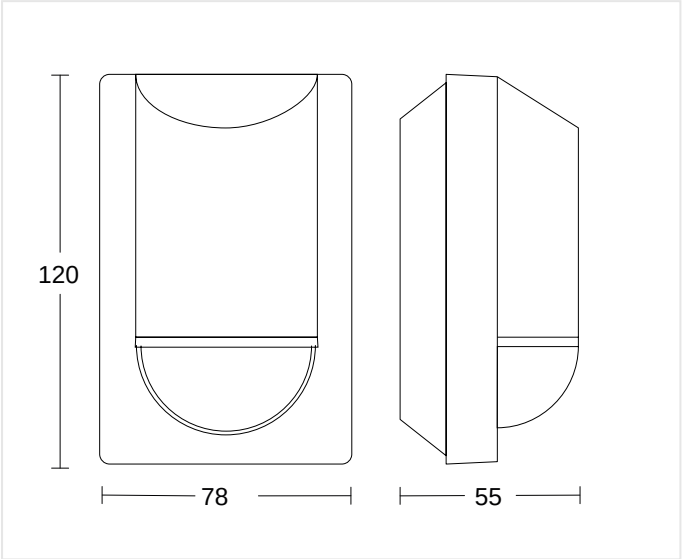

55 x 78 x 120 mm

MOUNTING HEIGHT

1,8 – 4,0 m	2,0 m	4,00 m
BEREICH	OPTIMAL	MAX

IS 2180-2 inox

MOTION DETECTOR

EAN **4007841603915**
E-Nr. **535996670**

Wiring Diagrams

WIRING DIAGRAM 1

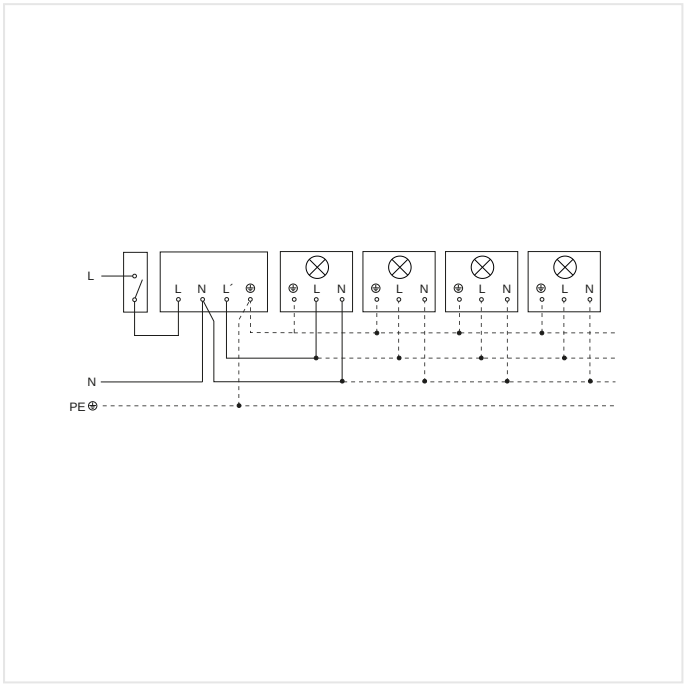

Light without neutral conductor

WIRING DIAGRAM 2

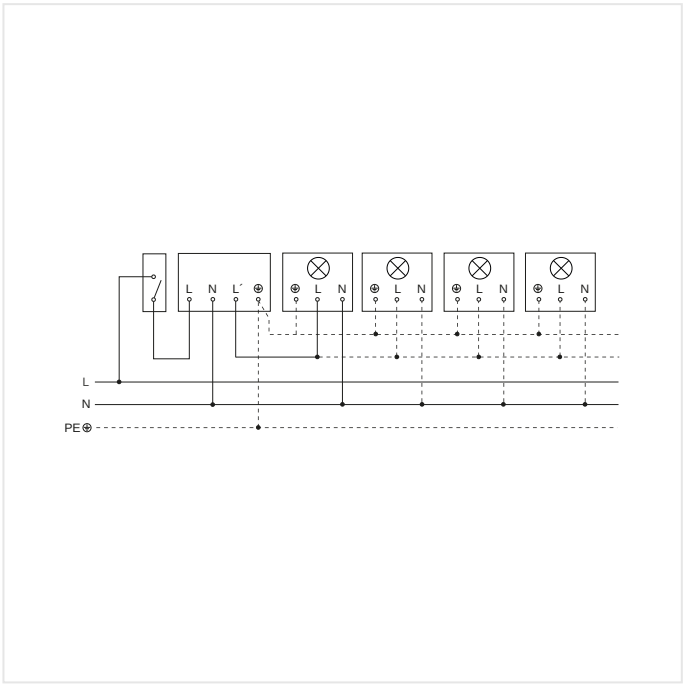

Light with neutral conductor

IS 2180-2 inox

MOTION DETECTOR

EAN **4007841603915**
E-Nr. **535996670**

Accessories

	ARTICLE NUMBER	DESCRIPTION	CATEGORY
	4007841085148	**Eckwandhalter für IS 180-2, IS 2180-2 und IS 2180 ECO weiss**	Accessory

ORDERING INFORMATION

Art.-Nr.	4007841603915
EAN	4007841603915
E-Number	535996670
Typ	**IS 2180-2 inox**

neva
lux

nevalux AG
Neugrütstrasse 2
8610 Uster
+41 44 508 78 78
info@nevalux.swiss