Dual HF DALI-2 APC - concealed

PRESENCE DETECTOR

EAN 4007841003005
E-Nr. 535935905

- Optional remote controls
- Optional surface-mounting adapter
- Optional guard cage
- HF ceiling adapter for installation in suspended ceilings

steinel

74 x 120 x 120 mm



Dual HF DALI-2 APC - concealed

PRESENCE DETECTOR

EAN 4007841003005
E-Nr. 535935905

Technical Data

IDENTIFICATION

Variant	DALI-2 Application Controller
Version	Presence detector

DIMENSIONS

Dimensions L × W × H	74 x 120 x 120 mm

ELECTRICAL

Mains connection	230 V / 50 – 60 Hz
Control output DALI	Broadcast 2x12 electronic ballasts

SENSOR TECHNOLOGY

Max. mounting height	3,50 m
Sensor technology	High frequency
Transmission power	< 1 mW
HF technology	5,8 GHz
Detection	also through glass, wood and stud walls
Detection angle	360 °, Corridor
Opening angle	140 °
Sneak-under protection	Yes
Segment-by-segment masking	No
Electronic scalability	Yes
Mechanical scalability	No
Radial range	20 x 3 m (60 m²)
Tangential range	20 x 3 m (60 m²)
Mounting height	2,5 – 3,5 m
Optimal mounting height	2,8 m

CONNECTIVITY

Networking	Yes
Type of networking	Master/Slave
Networking via	DALI 2

LIGHTING TECHNOLOGY

Soft light start	Yes
Continuous light	selectable
Constant light regulation	Yes

SETTINGS

Twilight switch	Yes
Twilight setting	10 – 1000 lx
Time setting	30 s – 30 min
Base light function	Yes
Base light function time	1-60 min, all night
Main light adjustable	50 - 100 %
Functions	Normal / test mode, Semi-/fully automatic, Pushbutton / switch mode, Manual ON / ON-OFF, Constant-lighting control ON-OFF
Settings via	Remote control, DIP switches, Potentiometers, Smart Remote
With remote control	No
Twilight setting teach	Yes
Base light function in percent	10 – 60 %
Base light function percent from	10 %

HOUSING & MATERIAL

Protection class (IP)	IP20
Ambient temperature	-25...+55 °C
Mounting location	ceiling
Application location	Indoors
Mounting type	Concealed mounting
Material	Plastic
Application room	Indoors, corridor / aisle
Colour	White
RAL colour	9010

SCOPE OF DELIVERY & WARRANTY

Manufacturer warranty	5 years
Corner wall bracket included	No

CERTIFICATES & EPREL

Certificates	DALI-2

Dual HF DALI-2 APC - concealed

PRESENCE DETECTOR

EAN **4007841003005**
E-Nr. **535935905**

Illustrations

TECHNICAL DRAWINGS

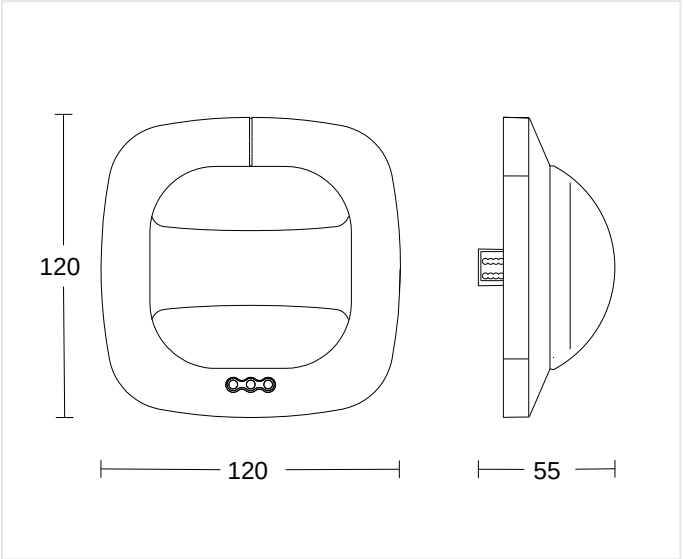

74 x 120 x 120 mm

MOUNTING HEIGHT

2,5 – 3,5 m	2,8 m	3,50 m
BEREICH	OPTIMAL	MAX

Dual HF DALI-2 APC - concealed

PRESENCE DETECTOR

EAN 4007841003005
E-Nr. 535935905

Wiring Diagrams

WIRING DIAGRAM 1

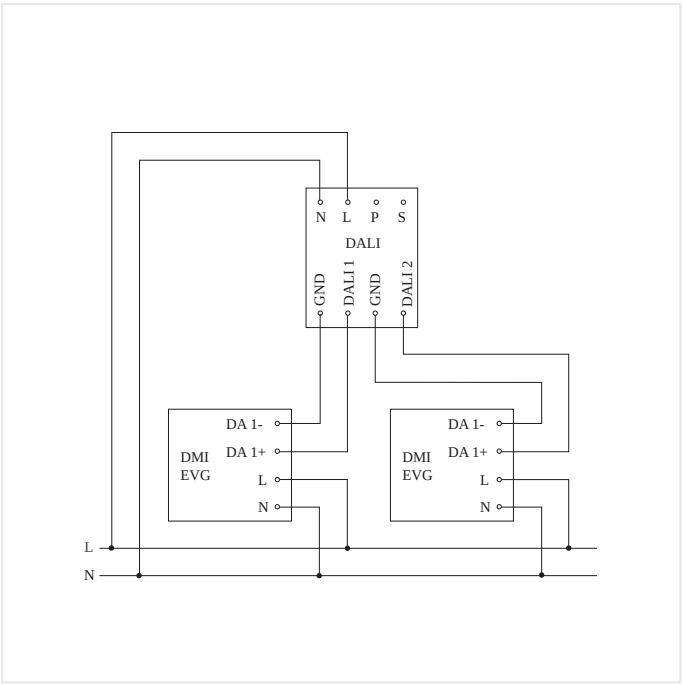

Master circuit diagram

WIRING DIAGRAM 2

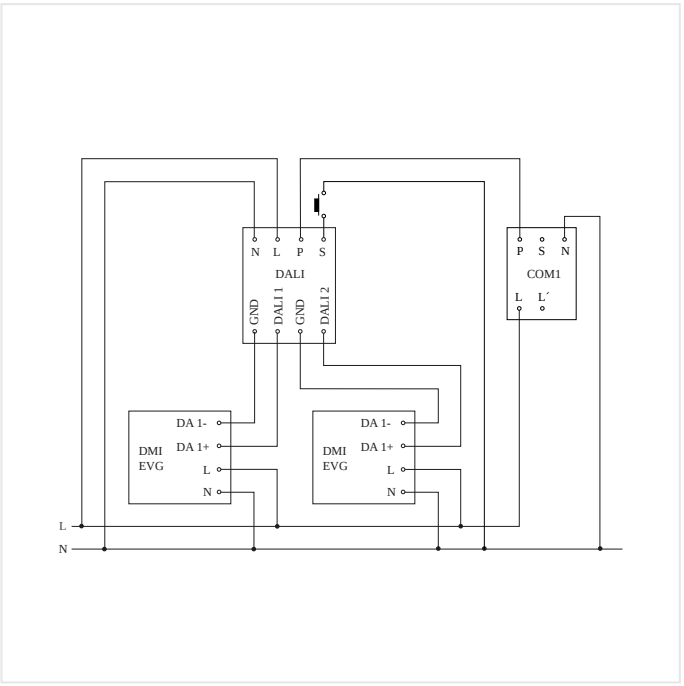

Master/master interconnection circuit diagram

Dual HF DALI-2 APC - concealed

PRESENCE DETECTOR

EAN **4007841003005**
E-Nr. **535935905**

Accessories

	ARTICLE NUMBER	DESCRIPTION	CATEGORY
	4007841006600	**HF-Deckenadapter**	Accessory
	4007841592806	**Nutzer Fernbedienung RC5**	Accessory
	4007841000363	**Aufputz-Adapter Control Pro IP54 weiss**	Accessory
	4007841003036	**Control PRO Schutzkorb**	Accessory
	4007841009151	**Smart Remote**	Accessory
	4007841559410	**Service Fernbedienung RC8**	Accessory

ORDERING INFORMATION

Art.-Nr.	4007841003005
EAN	4007841003005
E-Number	535935905
Typ	**Dual HF DALI-2 APC - concealed**

neva lux

nevalux AG
Neugrütstrasse 2
8610 Uster
+41 44 508 78 78
info@nevalux.swiss