RS PRO LED Q1 Neutral white white

SENSOR-SWITCHED LED INDOOR LIGHT

EAN 4007841007119
E-Nr. 941336109

- Including STEINEL LED system
- Intelligent LED cooling system
- Intelligent soft light start
- Optional basic lighting level 10 - 50 %
- Wireless interconnection with Remote Group Setting
- High-quality aluminium
- Optional remote control RC10
- Smart Remote remote control optional

steinel

56 x 331 x 331 mm



RS PRO LED Q1 Neutral white white

SENSOR-SWITCHED LED INDOOR LIGHT

EAN **4007841007119**
E-Nr. **941336109**

Technical Data

DIMENSIONS

Dimensions L × W × H	**56 x 331 x 331 mm**

ELECTRICAL

Mains connection	**230 V / 50 – 60 Hz**
Power	**26 W**

SENSOR TECHNOLOGY

Max. mounting height	**4,00 m**
Sensor technology	**High frequency**
Transmission power	**< 1 mW**
HF technology	**5,8 GHz**
With motion detector	**Yes**
Detection	**also through glass, wood and stud walls**
Detection angle	**360 °**
Opening angle	**160 °**
Segment-by-segment masking	**Yes**
Electronic scalability	**Yes**
Mechanical scalability	**No**
Radial range	**Ø 8 m (50 m²)**
Tangential range	**Ø 8 m (50 m²)**
Mounting height	**2,0 – 4,0 m**
Optimal mounting height	**2,5 m**

CONNECTIVITY

Networking	**Yes**
Type of networking	**Master/Slave, Master/Master**
Networking via	**Wireless**

LIGHTING TECHNOLOGY

Measured luminous flux 360°	**2920 lm**
Colour temperature	**4000 K**
LED colour deviation	**SDCM3**
With illuminant	**Yes, STEINEL LED system**
Illuminant	**LED cannot be replaced**
Base	**without**
LED cooling system	**Passive Thermo Control**
Soft light start	**Yes**
Continuous light	**selectable**

LIFETIME

LED lifetime max. °C	**50000 h**
LED lifetime L70B50 25°C	**> 60000 h**
Luminous flux decline per LM80	**L70B10**

SETTINGS

Twilight switch	**Yes**
Twilight setting	**2 – 2000 lx**
Time setting	**5 s – 15 min**
Base light function	**Yes**
Base light function time	**10/30 min, all night**
Main light adjustable	**50 - 100 %**
Functions	**Group parameterisation, Manual ON / ON-OFF, Master/slave override, Neighbouring group function**
Settings via	**DIP switches, Potentiometers, Remote control, Smart Remote**
With remote control	**No**
Twilight setting teach	**Yes**
Base light function in percent	**10 – 50 %**
Base light function percent from	**10 %**

HOUSING & MATERIAL

Impact resistance	**IK03**
Protection class (IP)	**IP20**
Protection class	**II**
Ambient temperature	**-10...+50 °C**
Housing material	**Aluminium**
Cover material	**Opal plastic**
Mounting location	**ceiling, wall**
Application location	**Indoors**
Mounting type	**Surface mounting**
Application room	**Indoors, WC / washroom, changing room, corridor / aisle, function room / ancillary room, kitchenette, outdoors, stairwell**
Colour	**White**

SCOPE OF DELIVERY & WARRANTY

Manufacturer warranty	**5 years**

RS PRO LED Q1 Neutral white white

SENSOR-SWITCHED LED INDOOR LIGHT

EAN **4007841007119**
E-Nr. **941336109**

Illustrations

TECHNICAL DRAWINGS

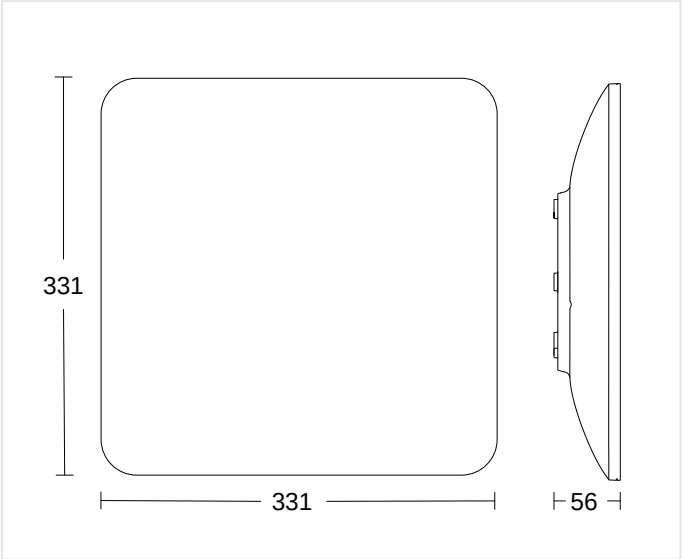

56 x 331 x 331 mm

MOUNTING HEIGHT

2,0 – 4,0 m	2,5 m	4,00 m
BEREICH	OPTIMAL	MAX

RS PRO LED Q1 Neutral white white

SENSOR-SWITCHED LED INDOOR LIGHT

EAN **4007841007119**
E-Nr. **941336109**

Wiring Diagrams

WIRING DIAGRAM 1

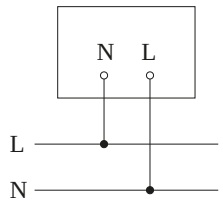

Slave/wireless master interconnection circuit diagram

WIRING DIAGRAM 2

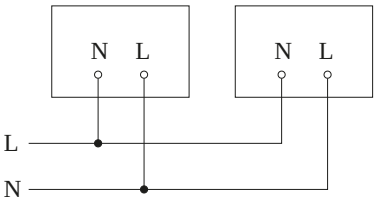

Master/master interconnection circuit diagram

RS PRO LED Q1 Neutral white white

SENSOR-SWITCHED LED INDOOR LIGHT

EAN **4007841007119**
E-Nr. **941336109**

Accessories

	ARTICLE NUMBER	DESCRIPTION	CATEGORY
	4007841009151	**Smart Remote**	Accessory
	4007841007645	**RC10 für RS PRO Q1**	Accessory

ORDERING INFORMATION

Art.-Nr.	4007841007119
EAN	4007841007119
E-Number	941336109
Typ	**RS PRO LED Q1 Neutral white white**

nevalux AG
Neugrütstrasse 2
8610 Uster
+41 44 508 78 78
info@nevalux.swiss