US 360 COM2 - Concealed wiring

PRESENCE DETECTOR

EAN 4007841007942
E-Nr. 535933310

- Optional remote controls
- Optional surface-mounting adapter
- Optional guard cage

steinel

67 x 120 x 120 mm



US 360 COM2 - Concealed wiring

PRESENCE DETECTOR

EAN **4007841007942**
E-Nr. **535933310**

Technical Data

IDENTIFICATION

Version	**Presence detector**

DIMENSIONS

Dimensions L × W × H	**67 x 120 x 120 mm**

ELECTRICAL

Mains connection	**230 V / 50 – 60 Hz**
Power	**2000 W**
Fluorescent lamps ECG	**1500 W**
Fluorescent lamps uncompensated	**1000 VA**
Fluorescent lamps series-compensated	**1000 VA**
Fluorescent lamps parallel-compensated	**1000 VA**
Switching output 1 low-voltage halogen lamps	**2000 VA**
LED lamps < 2 W	**100 W**
LED lamps > 2 W < 8 W	**300 W**
LED lamps > 8 W	**600 W**
Capacitive load in µF	**176 µF**

SENSOR TECHNOLOGY

Max. mounting height	**3,50 m**
Sensor technology	**Ultrasonic**
Detection angle	**360 °**
Opening angle	**180 °**
Sneak-under protection	**Yes**
Segment-by-segment masking	**No**
Electronic scalability	**Yes**
Mechanical scalability	**No**
Radial range	**Ø 10 m (79 m²)**
Tangential range	**Ø 6 m (28 m²)**
Mounting height	**2,5 – 3,5 m**
Presence range	**Ø 6 m (28 m²)**
US technology	**40 kHz**
Optimal mounting height	**2,8 m**

CONNECTIVITY

Networking	**Yes**
Type of networking	**Master/Slave, Master/Master**
Networking via	**Cable**

LIGHTING TECHNOLOGY

Soft light start	**No**
Continuous light	**selectable**
Constant light regulation	**No**

SETTINGS

Twilight switch	**Yes**
Twilight setting	**10 – 1000 lx**
Time setting	**30 s – 30 min**
Base light function	**No**
Main light adjustable	**No**
Functions	**Normal / test mode, Semi-/fully automatic, Pushbutton / switch mode, Manual ON / ON-OFF**
Settings via	**Remote control, DIP switches, Potentiometers, Smart Remote**
With remote control	**No**
Twilight setting teach	**Yes**

HOUSING & MATERIAL

Protection class (IP)	**IP20**
Ambient temperature	**-25...+55 °C**
Mounting location	**ceiling**
Application location	**Indoors**
Mounting type	**Concealed mounting**
Material	**Plastic**
Application room	**Indoors, WC / washroom, classroom, conference room / meeting room, duty room, function room / ancillary room, one-person office, open-plan office, recreation room, stairwell**
Colour	**White**
RAL colour	**9010**

SCOPE OF DELIVERY & WARRANTY

Manufacturer warranty	**5 years**
Corner wall bracket included	**No**

US 360 COM2 - Concealed wiring

PRESENCE DETECTOR

EAN **4007841007942**
E-Nr. **535933310**

Illustrations

TECHNICAL DRAWINGS

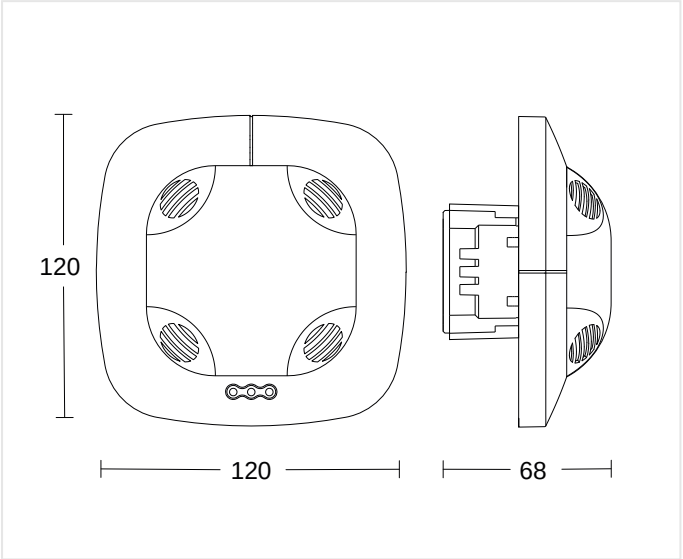

67 x 120 x 120 mm

MOUNTING HEIGHT

2,5 – 3,5 m	2,8 m	3,50 m
BEREICH	OPTIMAL	MAX

US 360 COM2 - Concealed wiring

PRESENCE DETECTOR

EAN **4007841007942**
E-Nr. **535933310**

Wiring Diagrams

WIRING DIAGRAM 1

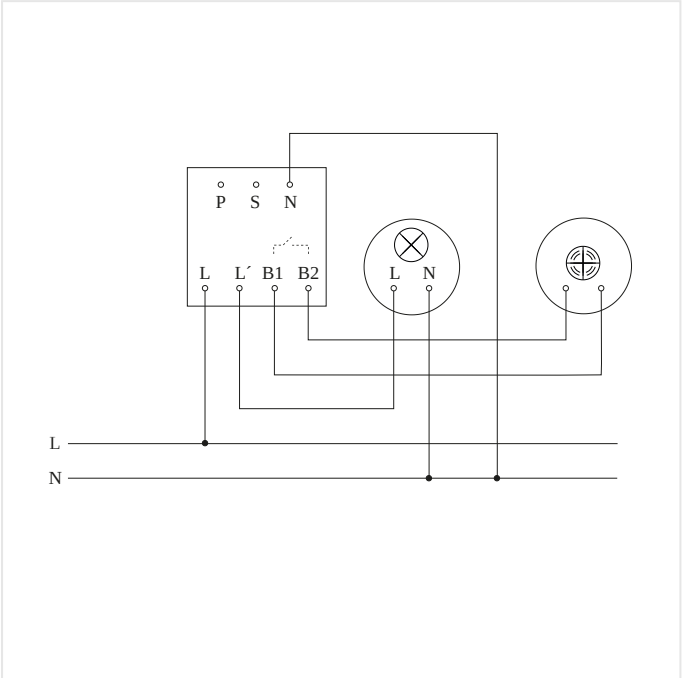

Master circuit diagram

WIRING DIAGRAM 2

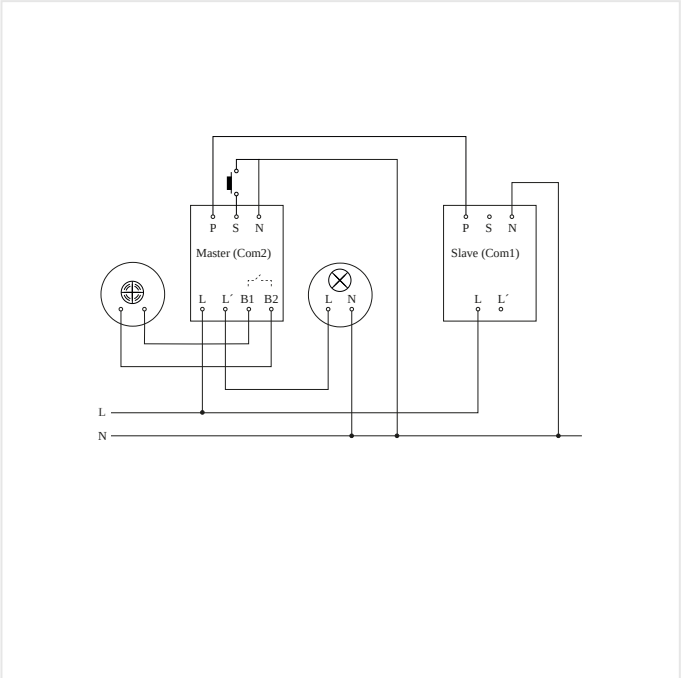

Master/slave interconnection circuit diagram

US 360 COM2 - Concealed wiring

PRESENCE DETECTOR

EAN **4007841007942**
E-Nr. **535933310**

Accessories

	ARTICLE NUMBER	DESCRIPTION	CATEGORY
	4007841009151	**Smart Remote**	Accessory
	4007841559410	**Service Fernbedienung RC8**	Accessory

ORDERING INFORMATION

Art.-Nr.	4007841007942
EAN	4007841007942
E-Number	535933310
Typ	**US 360 COM2 - Concealed wiring**

nevalux AG
Neugrütstrasse 2
8610 Uster
+41 44 508 78 78
info@nevalux.swiss