XLED PRO Square black

SENSOR-SWITCHED LED FLOODLIGHT

EAN 4007841009977
E-Nr. 924700221

- Including STEINEL LED system
- Intelligent LED cooling system
- Optional basic lighting level
- UV resistant material
- Interconnectable by cable
- RC9 remote control optional
- Smart Remote remote control optional

steinel

130 x 178 x 230 mm



XLED PRO Square black

SENSOR-SWITCHED LED FLOODLIGHT

EAN **4007841009977**
E-Nr. **924700221**

Technical Data

DIMENSIONS

Dimensions L × W × H	**130 x 178 x 230 mm**

ELECTRICAL

Mains connection	**230 V / 50 – 60 Hz**
Power	**24,8 W**

SENSOR TECHNOLOGY

Max. mounting height	**6,00 m**
Sensor technology	**passive infrared**
With motion detector	**Yes**
Opening angle	**180 °**
Sneak-under protection	**Yes**
Segment-by-segment masking	**Yes**
Electronic scalability	**No**
Mechanical scalability	**No**
Radial range	**r = 3 m (19 m²)**
Tangential range	**r = 12 m (302 m²)**
Mounting height	**1,8 – 6,0 m**
Optimal mounting height	**2,0 m**

CONNECTIVITY

Networking	**Yes**
Type of networking	**Sensor/Slave**
Networking quantity	**maximum of 10 floodlights**
Networking via	**Cable**

LIGHTING TECHNOLOGY

Measured luminous flux 360°	**2400 lm**
Colour temperature	**4000 K**
LED colour deviation	**SDCM3**
Colour rendering index	**80 - 89**
With illuminant	**Yes, STEINEL LED system**
Illuminant	**LED cannot be replaced**
Base	**without**
LED cooling system	**Passive Thermo Control**
Soft light start	**No**
Continuous light	**selectable, 4h**

LIFETIME

LED lifetime max. °C	**50000 h**
Luminous flux decline per LM80	**L70B10**

SETTINGS

Twilight switch	**Yes**
Twilight setting	**2 – 1000 lx**
Time setting	**5 s – 15 min**
Base light function	**Yes**
Base light function time	**10 min, 30 min, all night**
Main light adjustable	**No**
Settings via	**Remote control, Potentiometers, Smart Remote**
Twilight setting teach	**Yes**
Base light function in percent	**3 %**
Base light function percent from	**3 %**

HOUSING & MATERIAL

Impact resistance	**IK03**
Protection class (IP)	**IP54**
Protection class	**I**
Ambient temperature	**-20...+40 °C**
Housing material	**Aluminium**
Cover material	**Clear plastic**
Cover material (scope of delivery)	**Sticker**
Mounting location	**Wall**
Application location	**Outdoors**
Mounting type	**Surface mounting**
Application room	**Aussenbereich, Hof & Einfahrt**
Colour	**Black**

SCOPE OF DELIVERY & WARRANTY

Manufacturer warranty	**5 years**
Corner wall bracket included	**No**

XLED PRO Square black

SENSOR-SWITCHED LED FLOODLIGHT

EAN **4007841009977**
E-Nr. **924700221**

Illustrations

TECHNICAL DRAWINGS

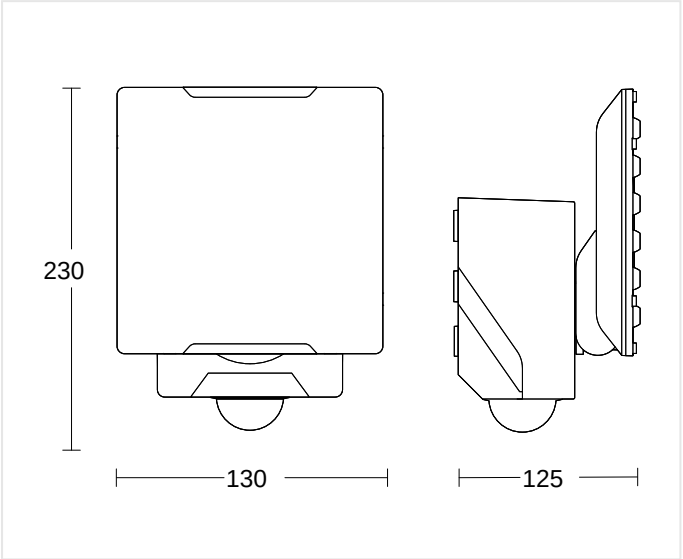

130 x 178 x 230 mm

MOUNTING HEIGHT

1,8 – 6,0 m	2,0 m	6,00 m
BEREICH	OPTIMAL	MAX

XLED PRO Square black

SENSOR-SWITCHED LED FLOODLIGHT

EAN **4007841009977**
E-Nr. **924700221**

Wiring Diagrams

WIRING DIAGRAM 1

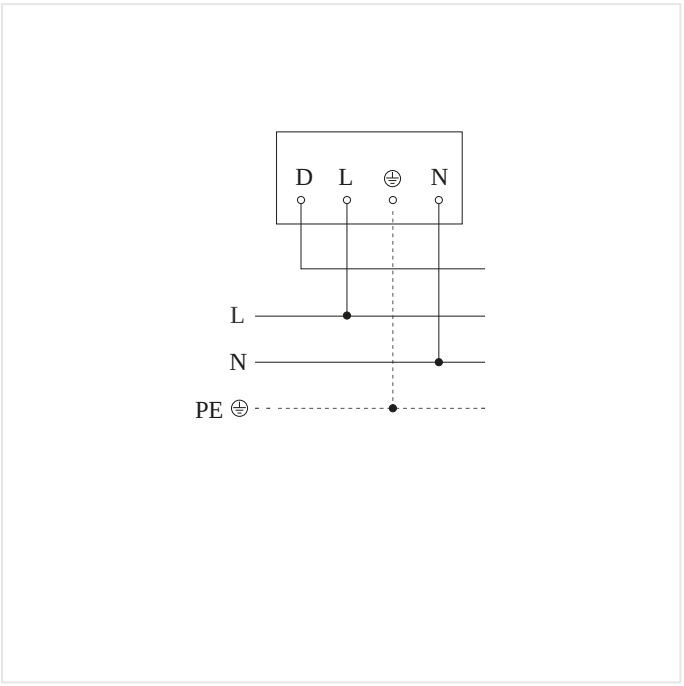

Master circuit diagram

WIRING DIAGRAM 2

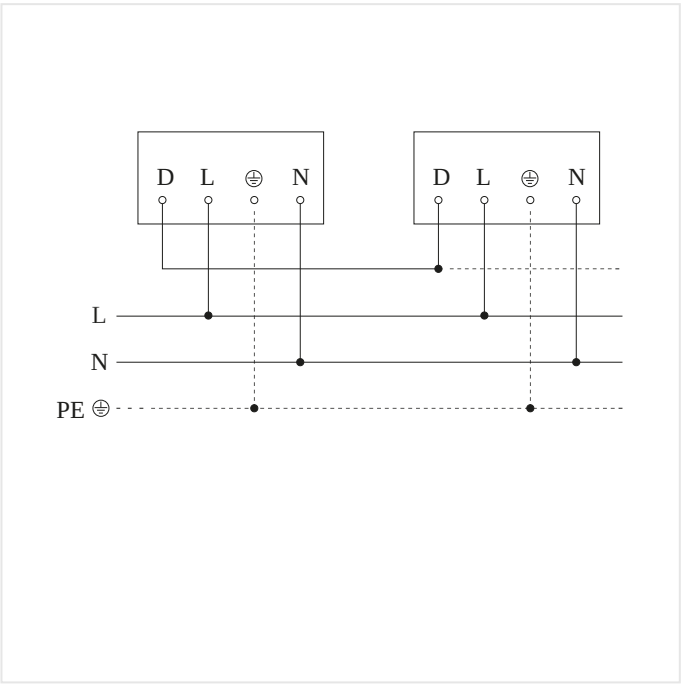

Master/slave and master/master interconnection circuit diagram

XLED PRO Square black

SENSOR-SWITCHED LED FLOODLIGHT

EAN **4007841009977**
E-Nr. **924700221**

Accessories

	ARTICLE NUMBER	DESCRIPTION	CATEGORY
	4007841009151	**Smart Remote**	Accessory
	4007841007638	**Fernbedienung RC9**	Accessory

ORDERING INFORMATION

Art.-Nr.	4007841009977
EAN	4007841009977
E-Number	924700221
Typ	**XLED PRO Square black**

neva lux

nevalux AG
Neugrütstrasse 2
8610 Uster
+41 44 508 78 78
info@nevalux.swiss