# Hallway DALI-2 Input Device - surface

**PRESENCE DETECTOR**

EAN 4007841064549
E-Nr. 535932608

- UV-resistant plastic

steinel

62 x 123 x 123 mm



# Hallway DALI-2 Input Device - surface

**PRESENCE DETECTOR**

EAN **4007841064549**
E-Nr. **535932608**

# Technical Data

### IDENTIFICATION

| | |
|---|---|
| Variant | **DALI-2 Input Device** |
| Version | **Presence detector** |

### DIMENSIONS

| | |
|---|---|
| Dimensions L × W × H | **62 x 123 x 123 mm** |

### ELECTRICAL

| | |
|---|---|
| Mains connection | **12 – 22,5 V** |
| Supply voltage detail | **DALI bus** |

### SENSOR TECHNOLOGY

| | |
|---|---|
| Max. mounting height | **4,00 m** |
| Sensor technology | **High frequency** |
| Transmission power | **< 1 mW** |
| HF technology | **5,8 GHz** |
| With motion detector | **Yes** |
| Detection | **also through glass, wood and stud walls** |
| Detection angle | **360 °, Corridor** |
| Opening angle | **140 °** |
| Sneak-under protection | **Yes** |
| Segment-by-segment masking | **No** |
| Electronic scalability | **Yes** |
| Mechanical scalability | **No** |
| Radial range | **25 x 3 m (75 m²)** |
| Tangential range | **25 x 3 m (75 m²)** |
| Mounting height | **2,0 – 4,0 m** |
| Optimal mounting height | **2,8 m** |

### CONNECTIVITY

| | |
|---|---|
| Networking | **Yes** |
| Type of networking | **Master/Slave** |
| With bus coupler | **Yes** |
| Control technology | **Steinel Connect** |
| Wireless networking via | **BT Open Mesh** |
| Networking via | **DALI 2** |

### LIGHTING TECHNOLOGY

| | |
|---|---|
| Soft light start | **No** |
| Continuous light | **selectable** |
| Constant light regulation | **Yes** |

### SETTINGS

| | |
|---|---|
| Twilight switch | **Yes** |
| Base light function | **No** |
| Main light adjustable | **No** |
| Settings via | **App, Smartphone, Tablet, Bus** |
| With remote control | **No** |
| Twilight setting teach | **No** |

### HOUSING & MATERIAL

| | |
|---|---|
| Protection class (IP) | **IP20** |
| Ambient temperature | **-20...+50 °C** |
| Mounting location | **ceiling** |
| Application location | **Indoors** |
| Mounting type | **Surface mounting** |
| Material | **Plastic** |
| Application room | **Indoors, corridor / aisle** |
| Colour | **White** |
| RAL colour | **9003** |

### SCOPE OF DELIVERY & WARRANTY

| | |
|---|---|
| Manufacturer warranty | **5 years** |
| Corner wall bracket included | **No** |

### CERTIFICATES & EPREL

| | |
|---|---|
| Certificates | **DALI-2** |

# Hallway DALI-2 Input Device - surface

**PRESENCE DETECTOR**

EAN **4007841064549**
E-Nr. **535932608**

## Illustrations

### TECHNICAL DRAWINGS

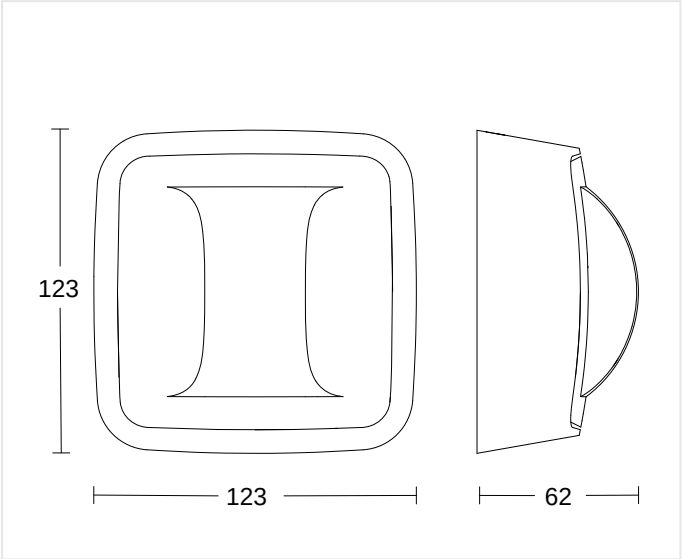


62 x 123 x 123 mm

### MOUNTING HEIGHT

| 2,0 – 4,0 m | 2,8 m | 4,00 m |
|---|---|---|
| BEREICH | OPTIMAL | MAX |

# Hallway DALI-2 Input Device - surface

**PRESENCE DETECTOR**

EAN 4007841064549
E-Nr. 535932608

## Wiring Diagrams

### WIRING DIAGRAM 1

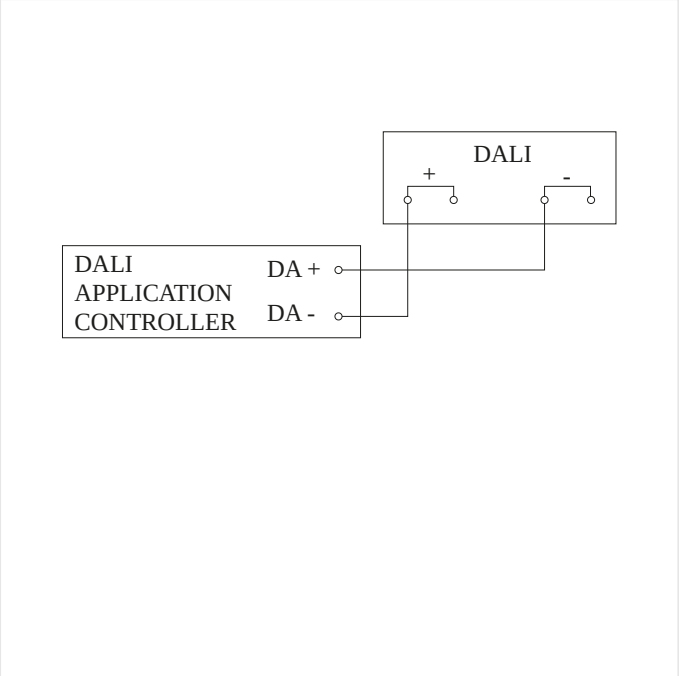


Circuit diagram

# Hallway DALI-2 Input Device - surface

**PRESENCE DETECTOR**

EAN **4007841064549**
E-Nr. **535932608**

## Accessories

**ORDERING INFORMATION**

| | |
|---|---|
| Art.-Nr. | 4007841064549 |
| EAN | 4007841064549 |
| E-Number | 535932608 |
| Typ | **Hallway DALI-2 Input Device - surface** |

neva lux

nevalux AG
Neugrütstrasse 2
8610 Uster
+41 44 508 78 78
info@nevalux.swiss