HF 3360 DALI-2 Application Controller - surface-mounted installation, square, white

MOTION DETECTOR

EAN 4007841011604
E-Nr. 535940466

- UV-resistant plastic
- Large terminal compartment
- Optional corner wall mount bracket
- Optional remote controls

steinel

52 x 95 x 95 mm



HF 3360 DALI-2 Application Controller - surface-mounted installation, square, white

MOTION DETECTOR

EAN
4007841011604
E-Nr.
535940466

Technical Data

IDENTIFICATION

Variant	DALI-2 Application Controller - surface, sq.
Version	Motion detectors

DIMENSIONS

Dimensions L × W × H	52 x 95 x 95 mm

ELECTRICAL

Mains connection	230 V / 50 – 60 Hz
Control output DALI	Broadcast 1x30 electronic ballasts
FIL_2_PRO interfaces	DALI-2 Application Controller

SENSOR TECHNOLOGY

Sensor technology	High frequency
HF technology	5,8 GHz
Detection	also through glass, wood and stud walls
Detection angle	360 °
Opening angle	180 °
Sneak-under protection	Yes
Segment-by-segment masking	No
Electronic scalability	Yes
Mechanical scalability	No
Radial range	Ø 8 m (50 m²)
Tangential range	Ø 8 m (50 m²)
Mounting height	2,0 – 4,0 m
Optimal mounting height	2,8 m
FIL_4_PRO sensor technology	High frequency

CONNECTIVITY

Networking	Yes
Type of networking	Master/Slave

LIGHTING TECHNOLOGY

Constant light regulation	Yes

SETTINGS

Twilight setting	2 – 1000 lx
Time setting	5 s – 15 min
Base light function	Yes
Base light function time	1-30 min, all night
Functions	Normal / test mode, Manual ON / ON-OFF, Constant-lighting control ON-OFF
Settings via	Remote control, Potentiometers, Smart Remote
With remote control	No
Twilight setting teach	Yes
Base light function in percent	10 – 50 %

HOUSING & MATERIAL

Protection class (IP)	IP54
Ambient temperature	-20...+50 °C
Mounting location	ceiling, corner, wall
Application location	Indoors
Mounting type	Surface mounting
Material	Plastic
Colour	White
RAL colour	9003

SCOPE OF DELIVERY & WARRANTY

Manufacturer warranty	5 years

OTHER

Application, location, room	function room / ancillary room, stairwell, WC / washroom, multi-storey / underground car park, Indoors

HF 3360 DALI-2 Application Controller - surface-mounted installation, square, white

MOTION DETECTOR

EAN
4007841011604
E-Nr.
535940466

Illustrations

TECHNICAL DRAWINGS

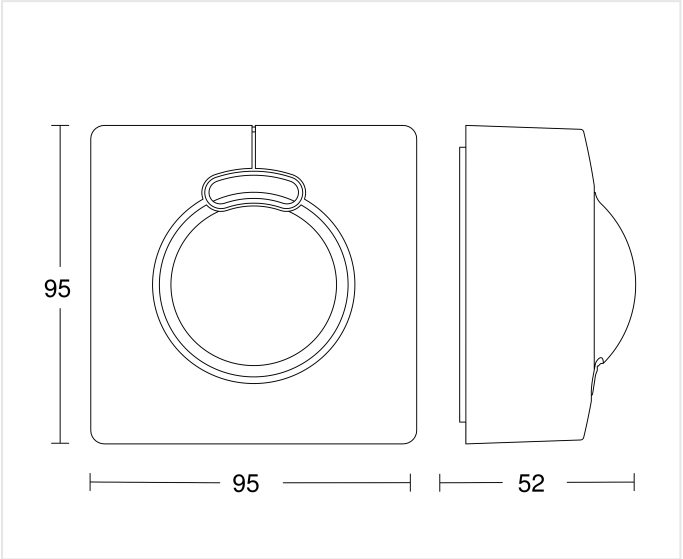

52 x 95 x 95 mm

MOUNTING HEIGHT

2,0 – 4,0 m BEREICH	2,8 m OPTIMAL

HF 3360 DALI-2 Application Controller - surface-mounted installation, square, white

MOTION DETECTOR

EAN
4007841011604
E-Nr.
535940466

Wiring Diagrams

WIRING DIAGRAM 1

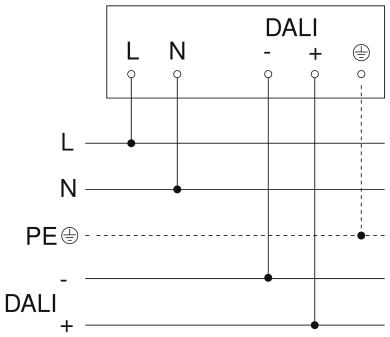

Master circuit diagram

WIRING DIAGRAM 2

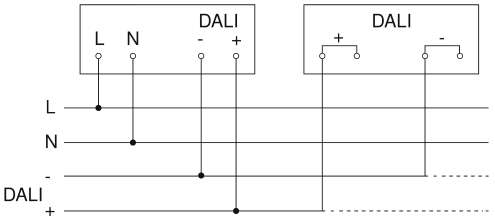

Circuit diagram for interconnecting DALI-2 APC with DALI-2 IPD

HF 3360 DALI-2 Application Controller - surface-mounted installation, square, white

MOTION DETECTOR

EAN
4007841011604
E-Nr.
535940466

Accessories

	ARTICLE NUMBER	DESCRIPTION	CATEGORY
	4007841056674	**Schwarze Blende für den HF 3360 Aufputz eckig**	Accessory
	4007841035174	**Eckwandhalter 3000 weiss**	Accessory
	4007841592806	**Nutzer Fernbedienung RC5**	Accessory
	4007841559410	**Service Fernbedienung RC8**	Accessory
	4007841009151	**Smart Remote**	Accessory
	4007841056698	**Schwarze Blende für den HF 3360 Aufputz rund**	Accessory

ORDERING INFORMATION

Art.-Nr.	4007841011604
EAN	4007841011604
E-Number	535940466

Typ**HF 3360 DALI-2 Application Controller - surface-mounted installation, square, white**

nevalux AG
Neugrütstrasse 2
8610 Uster
+41 44 508 78 78
info@nevalux.swiss