XLED slim S white

SENSOR-SWITCHED LED FLOODLIGHT

EAN 4007841012069

- Including STEINEL LED system
- Intelligent LED cooling system
- UV-resistant plastic
- Colour rendering index Ra ≥ 80

steinel

201 x 66 x 241 mm



XLED slim S white

SENSOR-SWITCHED LED FLOODLIGHT

EAN **4007841012069**

Technical Data

DIMENSIONS

Dimensions L × W × H	**201 x 66 x 241 mm**

ELECTRICAL

Mains connection	**230 V / 50 – 60 Hz**
Power	**7,2 W**

SENSOR TECHNOLOGY

Max. mounting height	**4,00 m**
Sensor technology	**passive infrared**
With motion detector	**Yes**
Detection angle	**160 °**
Sneak-under protection	**Yes**
Electronic scalability	**No**
Mechanical scalability	**No**
Radial range	**r = 4 m (22 m²)**
Tangential range	**r = 8 m (89 m²)**
Mounting height	**1,8 – 4,0 m**
Optimal mounting height	**2,2 m**

CONNECTIVITY

Networking	**No**

LIGHTING TECHNOLOGY

Measured luminous flux 360°	**720 lm**
Colour temperature	**3000 K**
LED colour deviation	**SDCM3**
Colour rendering index	**80 - 89**
With illuminant	**Yes, STEINEL LED system**
Illuminant	**LED cannot be replaced**
Base	**without**
LED cooling system	**Active and Passive Thermo Control**
Soft light start	**No**

LIFETIME

LED lifetime max. °C	**50000 h**
LED lifetime L70B50 25°C	**> 60000 h**
Luminous flux decline per LM80	**L70B10**

SETTINGS

Twilight switch	**Yes**
Time setting	**2 s – 70 min**
Main light adjustable	**No**
Settings via	**Potentiometers**

HOUSING & MATERIAL

Impact resistance	**IK03**
Protection class (IP)	**IP44**
Protection class	**I**
Ambient temperature	**-20...+40 °C**
Housing material	**Aluminium**
Cover material	**Clear plastic**
Cover material (scope of delivery)	**Sticker**
Mounting location	**Wall**
Application location	**Outdoors**
Mounting type	**Surface mounting**
Application room	**all round the building, outdoors, terrace / balcony**
Colour	**White**

SCOPE OF DELIVERY & WARRANTY

Manufacturer warranty	**3 years**
Corner wall bracket included	**No**

CERTIFICATES & EPREL

EPREL category	**Light source**

XLED slim S white

SENSOR-SWITCHED LED FLOODLIGHT

EAN 4007841012069

Illustrations

TECHNICAL DRAWINGS

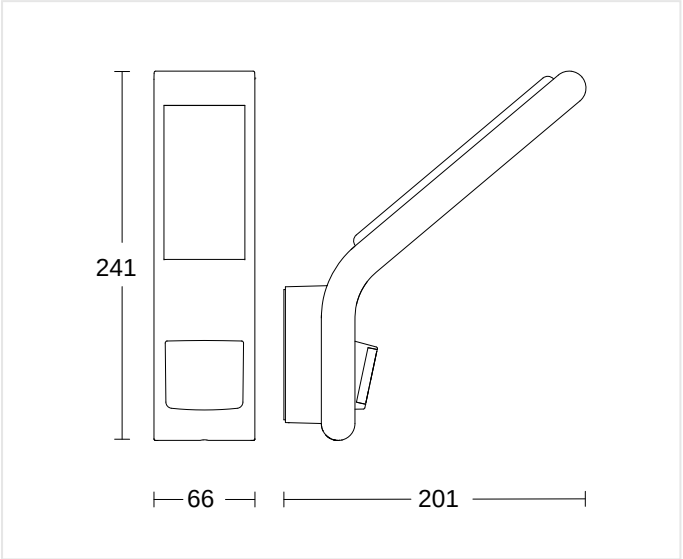

201 x 66 x 241 mm

MOUNTING HEIGHT

1,8 – 4,0 m	2,2 m	4,00 m
BEREICH	OPTIMAL	MAX

XLED slim S white

SENSOR-SWITCHED LED FLOODLIGHT

EAN 4007841012069

Wiring Diagrams

WIRING DIAGRAM 1

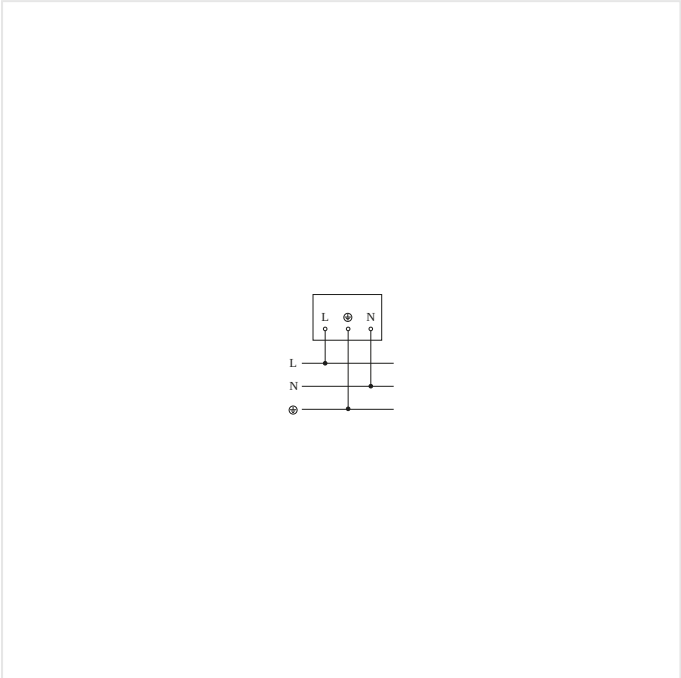

Circuit diagram

XLED slim S white

SENSOR-SWITCHED LED FLOODLIGHT

EAN **4007841012069**

Accessories

ORDERING INFORMATION

Art.-Nr.	4007841012069
EAN	4007841012069
Typ	**XLED slim S white**

nevalux AG
Neugrütstrasse 2
8610 Uster
+41 44 508 78 78
info@nevalux.swiss