sensIQ white

MOTION DETECTOR

EAN 4007841020439

- 4x pyro system
- Suitable for mounting on ceilings
- UV-resistant plastic
- Wireless interconnection
- Including corner wall mount
- Smart Remote remote control optional
- Remote control RC9 included

steinel

172 x 113 x 144 mm



sensIQ white

MOTION DETECTOR

EAN **4007841020439**

Technical Data

IDENTIFICATION

Version	**Motion detectors**
Type of accessory	**Corner adapter**

DIMENSIONS

Dimensions L × W × H	**172 x 113 x 144 mm**

ELECTRICAL

Mains connection	**230 V / 50 – 60 Hz**
Power	**2500 W**
Fluorescent lamps ECG	**1500 W**
Fluorescent lamps uncompensated	**1000 VA**
Fluorescent lamps series-compensated	**1800 VA**
Fluorescent lamps parallel-compensated	**500 VA**
Switching output 1 low-voltage halogen lamps	**2300 VA**
LED lamps < 2 W	**16 W**
LED lamps > 2 W < 8 W	**64 W**
LED lamps > 8 W	**64 W**
Capacitive load in µF	**176 µF**
Switching output 1 number of LED/fluorescent lamps	**8 pcs.**

SENSOR TECHNOLOGY

Max. mounting height	**5,00 m**
Sensor technology	**passive infrared**
With motion detector	**Yes**
Detection angle	**300 °**
Opening angle	**180 °**
Sneak-under protection	**Yes**
Segment-by-segment masking	**Yes**
Electronic scalability	**No**
Mechanical scalability	**Yes**
Range detail	**Reach adjustable from 2 - 20 m in 3 directions (100° in each)**
Radial range	**r = 4 m (42 m²)**
Tangential range	**r = 20 m (1047 m²)**
Switching zones	**1360 switching zones**
Mounting height	**2,0 – 5,0 m**
Optimal mounting height	**2,0 m**

CONNECTIVITY

Networking	**Yes**
Networking via	**Wireless**

LIGHTING TECHNOLOGY

Soft light start	**No**
Continuous light	**selectable, 4h**
Constant light regulation	**No**

SETTINGS

Twilight switch	**Yes**
Twilight setting	**2 – 2000 lx**
Time setting	**5 s – 15 min**
Base light function	**No**
Main light adjustable	**No**
Functions	**Connection to eNet server, Push button configuration**
Settings via	**Remote control, Potentiometers, eNet**
With remote control	**Yes**
Twilight setting teach	**Yes**

HOUSING & MATERIAL

Ambient temperature	**-20…+50 °C**
Mounting location	**ceiling, corner, wall**
Application location	**Indoors, Outdoors**
Mounting type	**Surface mounting**
Material	**Plastic**
Application room	**Indoors, all round the building, courtyard & driveway, front door, multi-storey / underground car park, outdoors, warehouse**
Colour	**White**
RAL colour	**9010**

SCOPE OF DELIVERY & WARRANTY

Manufacturer warranty	**5 years**
Corner wall bracket included	**Yes**

CERTIFICATES & EPREL

Certificates	**VDE**

sensIQ white

MOTION DETECTOR

EAN 4007841020439

Illustrations

TECHNICAL DRAWINGS

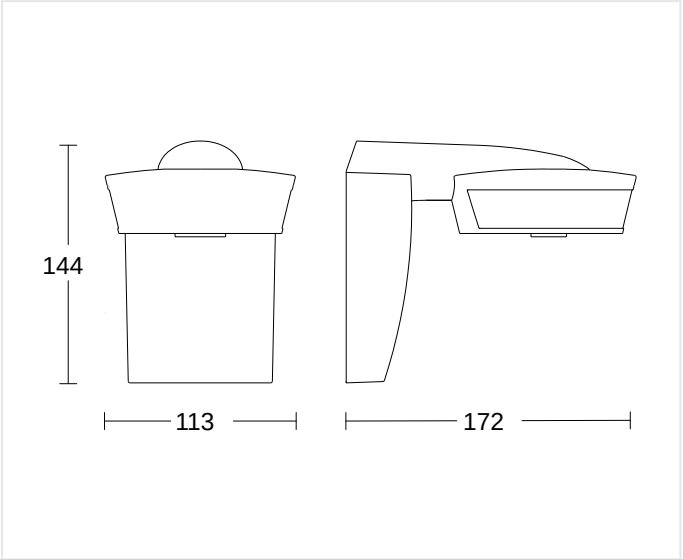

172 x 113 x 144 mm

MOUNTING HEIGHT

2,0 – 5,0 m	2,0 m	5,00 m
BEREICH	OPTIMAL	MAX

sensIQ white

MOTION DETECTOR

EAN 4007841020439

Wiring Diagrams

WIRING DIAGRAM 1

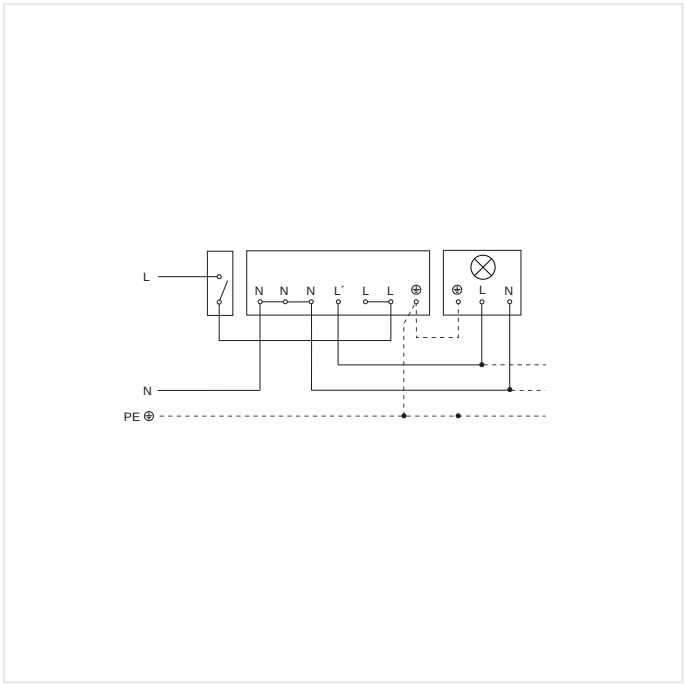

Light without neutral conductor

WIRING DIAGRAM 2

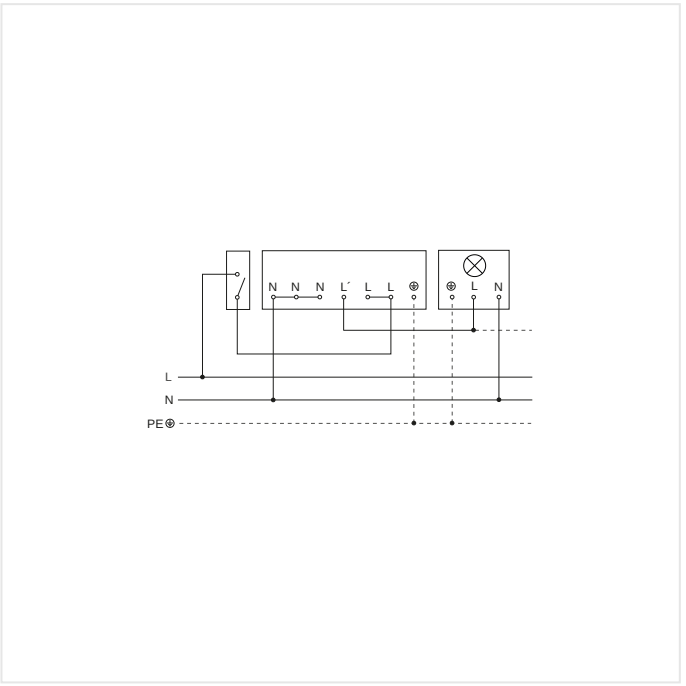

Light with neutral conductor

sensIQ white

MOTION DETECTOR

EAN 4007841020439

Accessories

	ARTICLE NUMBER	DESCRIPTION	CATEGORY
	4007841009151	**Smart Remote**	Accessory

ORDERING INFORMATION

Art.-Nr.	4007841020439
EAN	4007841020439
Typ	**sensIQ white**

nevalux AG
Neugrütstrasse 2
8610 Uster
+41 44 508 78 78
info@nevalux.swiss