IS 140-2 Z-Wave white

MOTION DETECTOR

EAN 4007841029814

- UV-resistant plastic
- Optional corner wall mount bracket

steinel

99 x 86 x 82 mm



IS 140-2 Z-Wave white

MOTION DETECTOR

EAN **4007841029814**

Technical Data

IDENTIFICATION

Version	**Motion detectors**

DIMENSIONS

Dimensions L × W × H	**99 x 86 x 82 mm**

ELECTRICAL

Mains connection	**230 V / 50 – 60 Hz**
Power	**1000 W**
Switching output 1 resistive	**1000 W**
Fluorescent lamps ECG	**430 W**
Fluorescent lamps uncompensated	**500 VA**
Fluorescent lamps series-compensated	**500 VA**
Fluorescent lamps parallel-compensated	**500 VA**
Switching output 1 low-voltage halogen lamps	**1000 VA**
LED lamps < 2 W	**16 W**
LED lamps > 2 W < 8 W	**64 W**
LED lamps > 8 W	**64 W**
Capacitive load in µF	**132 µF**
Switching output 1 number of LED/fluorescent lamps	**6 pcs.**

SENSOR TECHNOLOGY

Max. mounting height	**3,00 m**
Sensor technology	**passive infrared**
Detection angle	**140 °**
Opening angle	**40 °**
Sneak-under protection	**Yes**
Segment-by-segment masking	**Yes**
Electronic scalability	**No**
Mechanical scalability	**No**
Radial range	**r = 3 m (11 m²)**
Tangential range	**r = 14 m (239 m²)**
Switching zones	**144 switching zones**
Transmission range	**Up to 100 m in the open, 30 m indoors**
Mounting height	**1,8 – 3,0 m**
Optimal mounting height	**2,0 m**

CONNECTIVITY

Networking	**Yes**
Networking via	**Wireless**

LIGHTING TECHNOLOGY

Soft light start	**No**
Constant light regulation	**No**

SETTINGS

Twilight switch	**Yes**
Twilight setting	**2 – 2000 lx**
Time setting	**5 s – 15 min**
Base light function	**No**
Main light adjustable	**No**
Functions	**Sensor channel, Actuator channel**
Settings via	**Z-Wave, Potentiometers**
With remote control	**No**
Twilight setting teach	**No**

HOUSING & MATERIAL

Protection class (IP)	**IP54**
Protection class	**II**
Ambient temperature	**-20...+50 °C**
Mounting location	**Wall**
Application location	**Indoors, Outdoors**
Mounting type	**Surface mounting**
Material	**Plastic**
Application room	**all round the building, courtyard & driveway, front door, outdoors, terrace / balcony**
Colour	**White**
RAL colour	**9010**

SCOPE OF DELIVERY & WARRANTY

Manufacturer warranty	**3 years**
Corner wall bracket included	**No**

IS 140-2 Z-Wave white

MOTION DETECTOR

EAN 4007841029814

Illustrations

TECHNICAL DRAWINGS

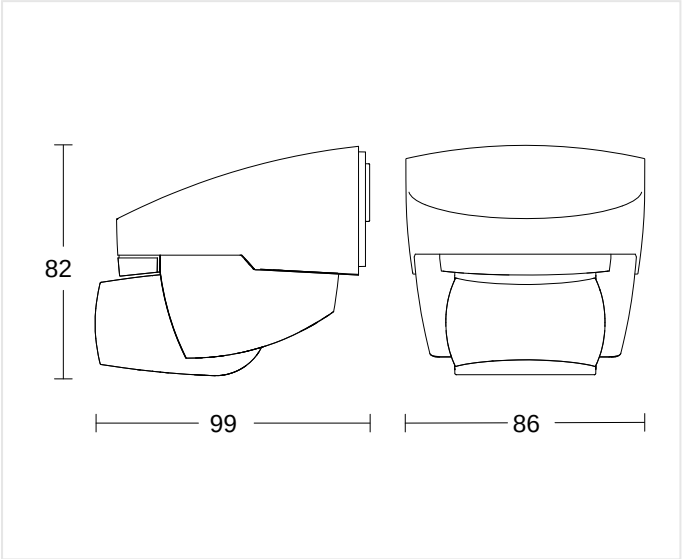

99 x 86 x 82 mm

MOUNTING HEIGHT

1,8 – 3,0 m	2,0 m	3,00 m
BEREICH	OPTIMAL	MAX

IS 140-2 Z-Wave white

MOTION DETECTOR

EAN 4007841029814

Wiring Diagrams

WIRING DIAGRAM 1

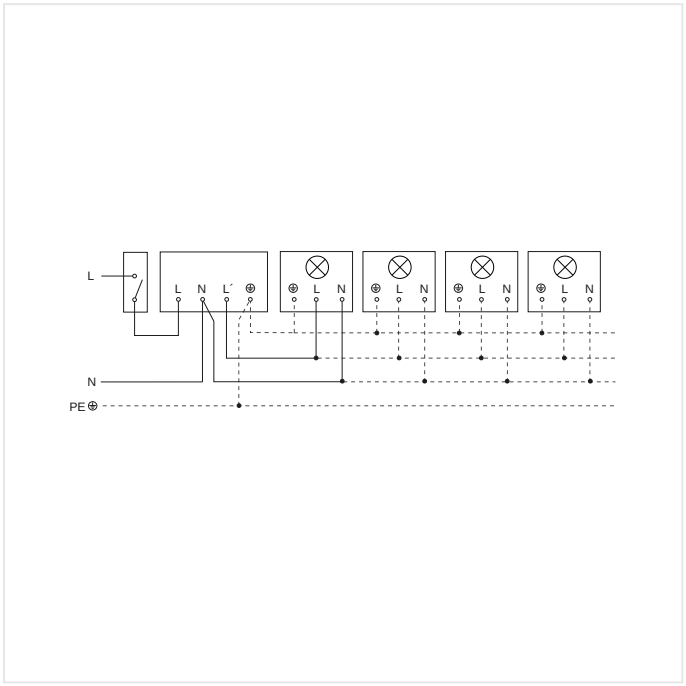

Light without neutral conductor

WIRING DIAGRAM 2

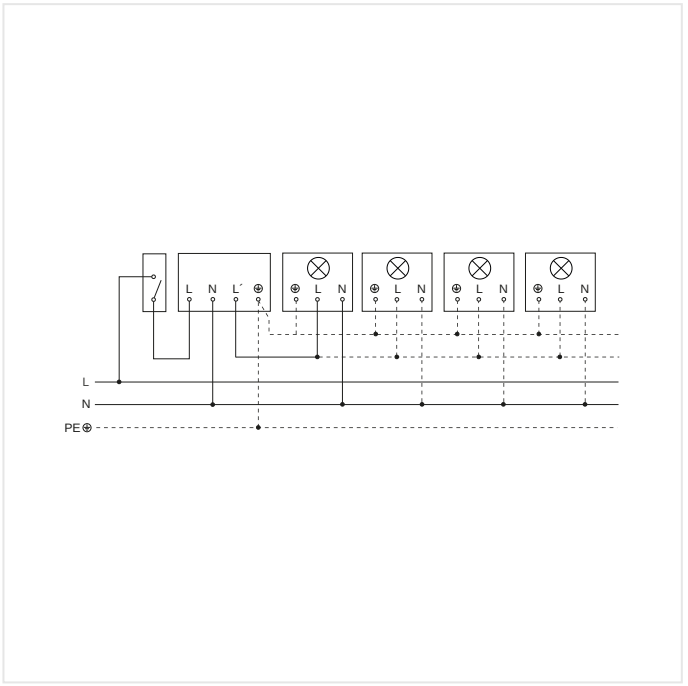

Light with neutral conductor

IS 140-2 Z-Wave white

MOTION DETECTOR

EAN 4007841029814

Accessories

	ARTICLE NUMBER	DESCRIPTION	CATEGORY
	4007841631864	**Eckwandhalter 07 (IS 140-2) schwarz**	Accessory
	4007841631765	**Eckwandhalter 07 weiss**	Accessory

ORDERING INFORMATION

Art.-Nr.	4007841029814
EAN	4007841029814
Typ	**IS 140-2 Z-Wave white**

nevalux AG
Neugrütstrasse 2
8610 Uster
+41 44 508 78 78
info@nevalux.swiss