# IR 180 KNX - white

**PRESENCE SWITCH**

EAN 4007841032975
E-Nr. 535941668

- Optional adapters made of UV-resistant plastic

steinel

50 x 80 x 80 mm



# IR 180 KNX - white

**PRESENCE SWITCH**

EAN 4007841032975
E-Nr. 535941668

# Technical Data

### IDENTIFICATION

| | |
|---|---|
| Variant | KNX - white |
| Version | Presence detector |

### DIMENSIONS

| | |
|---|---|
| Dimensions L × W × H | 50 x 80 x 80 mm |

### ELECTRICAL

| | |
|---|---|
| Supply voltage detail | KNX bus |
| FIL_2_PRO interfaces | KNX |

### SENSOR TECHNOLOGY

| | |
|---|---|
| Sensor technology | passive infrared |
| Detection angle | 180 ° |
| Opening angle | 90 ° |
| Sneak-under protection | Yes |
| Segment-by-segment masking | No |
| Electronic scalability | Yes |
| Mechanical scalability | No |
| Radial range | r = 4 m (25 m²) |
| Tangential range | r = 20 m (628 m²) |
| Mounting height | 1,1 – 1,2 m |
| Presence range | r = 4 m (25 m²) |
| Optimal mounting height | 1,2 m |
| FIL_4_PRO sensor technology | Passive infrared |

### CONNECTIVITY

| | |
|---|---|
| Networking | Yes |
| Type of networking | Master/Slave, Master/Master |
| KNX functions | Light output 4x, Presence output, Light level, Constant-lighting control, Basic light level function, HVAC output, Integrated button, Temperature output, Humidity output |
| With bus coupler | No |

### LIGHTING TECHNOLOGY

| | |
|---|---|
| Constant light regulation | Yes |

### SETTINGS

| | |
|---|---|
| Twilight setting | 2 – 1000 lx |
| Time setting | 60 s – 255 min |
| Base light function | Yes |
| Base light function time | Permanently ON, 1-255 min, all night |
| Settings via | ETS software, Remote control, Smart Remote |
| Twilight setting teach | Yes |
| Base light function in percent | 10 – 50 % |

### HOUSING & MATERIAL

| | |
|---|---|
| Protection class (IP) | IP20 |
| Ambient temperature | 0...+40 °C |
| Mounting location | Wall |
| Application location | Indoors |
| Mounting type | Concealed mounting |
| Material | Plastic |
| Colour | White |
| RAL colour | 9010 |

### SCOPE OF DELIVERY & WARRANTY

| | |
|---|---|
| Manufacturer warranty | 5 years |

### OTHER

| | |
|---|---|
| Application, location, room | one-person office, corridor / aisle, function room / ancillary room, kitchenette, stairwell, WC / washroom, Indoors |

# IR 180 KNX - white

**PRESENCE SWITCH**

EAN **4007841032975**
E-Nr. **535941668**

## Illustrations

### TECHNICAL DRAWINGS

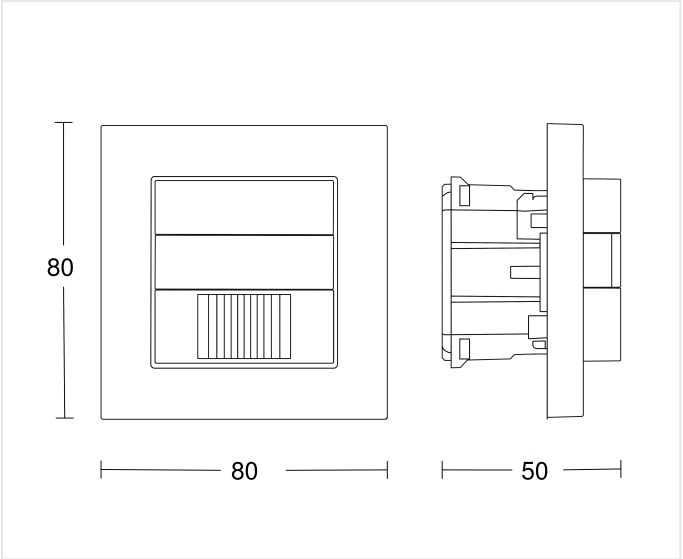


50 x 80 x 80 mm

### MOUNTING HEIGHT

| | |
|---|---|
| 1,1 – 1,2 m<br>BEREICH | 1,2 m<br>OPTIMAL |

# IR 180 KNX - white

**PRESENCE SWITCH**

EAN **4007841032975**
E-Nr. **535941668**

## Accessories

| | ARTICLE NUMBER | DESCRIPTION | CATEGORY |
|---|---|---|---|
|  | 4007841034139 | **Adapterrahmen für IR/HF 180 Busch-Jaeger - weiss** | Accessory |
|  | 4007841034160 | **Adapterrahmen für IR/HF 180 Feller - weiss** | Accessory |
|  | 4007841034184 | **Adapterrahmen für IR/HF 180 Jung - weiss** | Accessory |
|  | 4007841592912 | **Nutzer Fernbedienung RC7 KNX** | Accessory |
|  | 4007841593018 | **Service Fernbedienung RC6 KNX** | Accessory |

**ORDERING INFORMATION**

| | |
|---|---|
| Art.-Nr. | 4007841032975 |
| EAN | 4007841032975 |
| E-Number | 535941668 |
| Typ | **IR 180 KNX - white** |

neva lux

nevalux AG
Neugrütstrasse 2
8610 Uster
+41 44 508 78 78
info@nevalux.swiss