IR 180 UNIVERSAL white

PRESENCE SWITCH

EAN 4007841033149
E-Nr. 535941667

- Optional adapters made of UV-resistant plastic
- 2 or 3-wire installation

steinel

50 x 80 x 80 mm



IR 180 UNIVERSAL white

PRESENCE SWITCH

EAN **4007841033149**
E-Nr. **535941667**

Technical Data

IDENTIFICATION

Variant	**2-wire technology**
Version	**Presence detector**

DIMENSIONS

Dimensions L × W × H	**50 x 80 x 80 mm**

ELECTRICAL

Mains connection	**230 V / 50 – 60 Hz**
Switching output 1 resistive	**200 W**
Capacitive load in µF	**132 µF**
Switching output 1 number of LED/fluorescent lamps	**6 pcs.**

SENSOR TECHNOLOGY

Max. mounting height	**1,20 m**
Sensor technology	**passive infrared**
Detection angle	**180 °**
Opening angle	**90 °**
Sneak-under protection	**Yes**
Segment-by-segment masking	**No**
Electronic scalability	**Yes**
Mechanical scalability	**No**
Radial range	**r = 4 m (25 m²)**
Tangential range	**r = 20 m (628 m²)**
Switching zones	**96 switching zones**
Mounting height	**1,1 – 1,2 m**
Presence range	**r = 4 m (25 m²)**
Optimal mounting height	**1,2 m**

CONNECTIVITY

Networking	**No**

LIGHTING TECHNOLOGY

Soft light start	**No**
Continuous light	**selectable**
Constant light regulation	**No**

SETTINGS

Twilight switch	**Yes**
Twilight setting	**2 – 1000 lx**
Time setting	**30 s – 15 min**
Base light function	**No**
Main light adjustable	**No**
Functions	**Switch active / switch inactive, Normal / test mode, Manual ON / ON-OFF**
Settings via	**Remote control, Potentiometers, Smart Remote**
With remote control	**No**
Twilight setting teach	**Yes**

HOUSING & MATERIAL

Protection class (IP)	**IP20**
Ambient temperature	**0...+40 °C**
Mounting location	**Wall**
Application location	**Indoors**
Mounting type	**Concealed mounting**
Material	**Plastic**
Application room	**Indoors, WC / washroom, corridor / aisle, function room / ancillary room, kitchenette, one-person office, stairwell**
Colour	**White**
RAL colour	**9010**

SCOPE OF DELIVERY & WARRANTY

Manufacturer warranty	**5 years**
Corner wall bracket included	**No**

CERTIFICATES & EPREL

Certificates	**KEMA**

IR 180 UNIVERSAL white

PRESENCE SWITCH

EAN **4007841033149**
E-Nr. **535941667**

Illustrations

TECHNICAL DRAWINGS

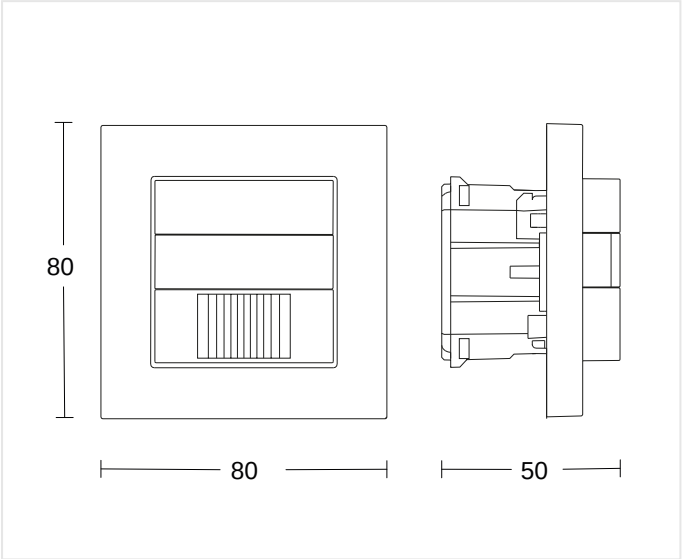

50 x 80 x 80 mm

MOUNTING HEIGHT

1,1 – 1,2 m	1,2 m	1,20 m
BEREICH	OPTIMAL	MAX

IR 180 UNIVERSAL white

PRESENCE SWITCH

EAN **4007841033149**
E-Nr. **535941667**

Wiring Diagrams

WIRING DIAGRAM 1

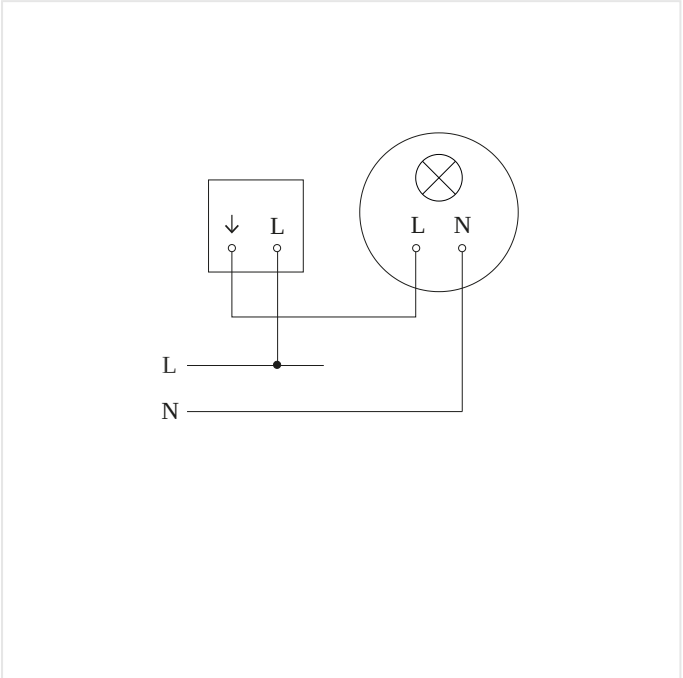

Master circuit diagram

IR 180 UNIVERSAL white

PRESENCE SWITCH

EAN **4007841033149**
E-Nr. **535941667**

Accessories

	ARTICLE NUMBER	DESCRIPTION	CATEGORY
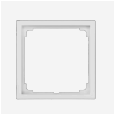	4007841034160	**Adapterrahmen für IR/HF 180 Feller - weiss**	Accessory
	4007841034184	**Adapterrahmen für IR/HF 180 Jung - weiss**	Accessory
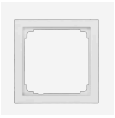	4007841034139	**Adapterrahmen für IR/HF 180 Busch-Jaeger - weiss**	Accessory

ORDERING INFORMATION

Art.-Nr.	4007841033149
EAN	4007841033149
E-Number	535941667
Typ	**IR 180 UNIVERSAL white**

neva lux

nevalux AG
Neugrütstrasse 2
8610 Uster
+41 44 508 78 78
info@nevalux.swiss