IS 3360 PF - concealed, sq.

MOTION AND PRESENCE DETECTOR

EAN 4007841033491
E-Nr. 535945067

- UV-resistant plastic
- Optional remote controls

steinel

78 x 94 x 94 mm



IS 3360 PF - concealed, sq.

MOTION AND PRESENCE DETECTOR

EAN 4007841033491
E-Nr. 535945067

Technical Data

IDENTIFICATION

Variant	PF - concealed, sq.
Version	Motion and Presence Detector

DIMENSIONS

Dimensions L × W × H	78 x 94 x 94 mm

ELECTRICAL

Mains connection	230 V / 50 – 60 Hz
Power	2000 W
Fluorescent lamps ECG	1500 W
Fluorescent lamps uncompensated	1000 VA
Fluorescent lamps series-compensated	400 VA
Fluorescent lamps parallel-compensated	400 VA
Switching output 1 low-voltage halogen lamps	2000 VA
LED lamps < 2 W	100 W
LED lamps > 2 W < 8 W	300 W
LED lamps > 8 W	600 W
Capacitive load in µF	176 µF
FIL_2_PRO interfaces	PF (Switching a floating relay)

SENSOR TECHNOLOGY

Max. mounting height	4,00 m
Sensor technology	passive infrared
Detection angle	360 °
Opening angle	180 °
Sneak-under protection	Yes
Segment-by-segment masking	Yes
Electronic scalability	No
Mechanical scalability	No
Radial range	Ø 8 m (50 m²)
Tangential range	Ø 40 m (1257 m²)
Switching zones	1416 switching zones
Mounting height	2,5 – 4,0 m
Presence range	Ø 3 m (7 m²)
Optimal mounting height	2,8 m
FIL_4_PRO sensor technology	Passive infrared

CONNECTIVITY

Networking	Yes
Type of networking	Master/Master

LIGHTING TECHNOLOGY

Constant light regulation	No

SETTINGS

Twilight setting	2 – 1000 lx
Time setting	5 s – 15 min
Base light function	No
Functions	Normal / test mode, Manual ON / ON-OFF
Settings via	Remote control, Potentiometers, Smart Remote
With remote control	No
Twilight setting teach	Yes

HOUSING & MATERIAL

Protection class (IP)	IP20
Ambient temperature	-20...+50 °C
Mounting location	ceiling
Application location	Indoors
Mounting type	Concealed mounting
Material	Plastic
Colour	White
RAL colour	9003

SCOPE OF DELIVERY & WARRANTY

Manufacturer warranty	5 years

OTHER

Application, location, room	production facilities, recreation room, changing room, function room / ancillary room, sports hall, reception / lobby, stairwell, WC / washroom, multi-storey / underground car park, warehouse, Indoors

IS 3360 PF - concealed, sq.

MOTION AND PRESENCE DETECTOR

EAN **4007841033491**
E-Nr. **535945067**

Illustrations

TECHNICAL DRAWINGS

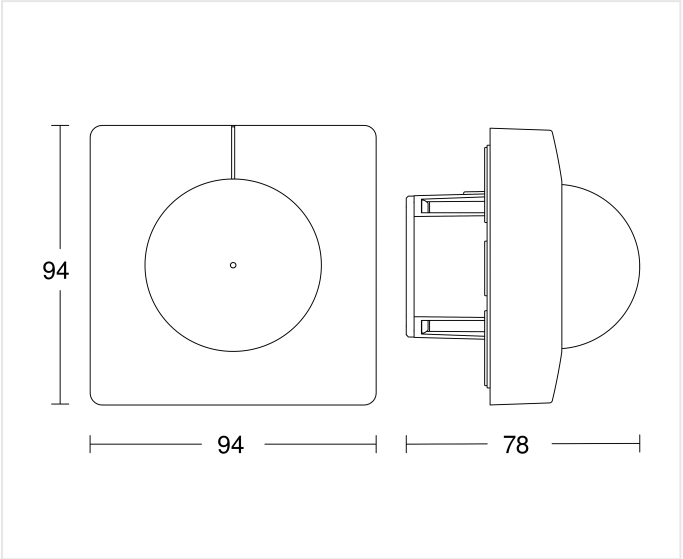

78 x 94 x 94 mm

MOUNTING HEIGHT

2,5 – 4,0 m	2,8 m	4,00 m
BEREICH	OPTIMAL	MAX

IS 3360 PF - concealed, sq.

MOTION AND PRESENCE DETECTOR

EAN **4007841033491**
E-Nr. **535945067**

Wiring Diagrams

WIRING DIAGRAM 1

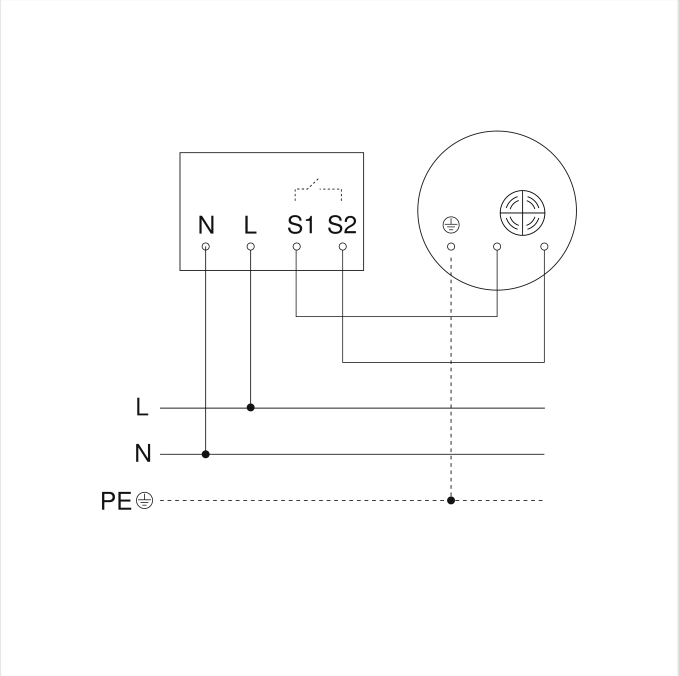

Master circuit diagram

IS 3360 PF - concealed, sq.

MOTION AND PRESENCE DETECTOR

EAN **4007841033491**
E-Nr. **535945067**

Accessories

	ARTICLE NUMBER	DESCRIPTION	CATEGORY
	4007841056728	**Schwarze Blende für IR-Sensoren Unterputz eckig**	Accessory
	4007841009151	**Smart Remote**	Accessory
	4007841559410	**Service Fernbedienung RC8**	Accessory
	4007841056742	**Schwarze Blende für IR-Sensoren Unterputz rund**	Accessory

ORDERING INFORMATION

Art.-Nr.	4007841033491
EAN	4007841033491
E-Number	535945067
Typ	**IS 3360 PF - concealed, sq.**

nevalux AG
Neugrütstrasse 2
8610 Uster
+41 44 508 78 78
info@nevalux.swiss