HF 3360 COM1 - surface, rd.

MOTION DETECTOR

EAN 4007841033668
E-Nr. 535940560

- UV-resistant plastic
- Large terminal compartment
- Optional remote controls

steinel

126 x 52 mm



HF 3360 COM1 - surface, rd.

MOTION DETECTOR

EAN 4007841033668
E-Nr. 535940560

Technical Data

IDENTIFICATION

Version	Motion detectors

DIMENSIONS

Dimensions Ø × H	126 x 52 mm

ELECTRICAL

Mains connection	230 V / 50 – 60 Hz
Power	2000 W
Switching output 1 resistive	2000 W
Fluorescent lamps ECG	1500 W
Fluorescent lamps uncompensated	1000 VA
Fluorescent lamps series-compensated	400 VA
Fluorescent lamps parallel-compensated	400 VA
Switching output 1 low-voltage halogen lamps	2000 VA
LED lamps < 2 W	100 W
LED lamps > 2 W < 8 W	300 W
LED lamps > 8 W	600 W
Capacitive load in µF	176 µF
Switching output 1 number of LED/fluorescent lamps	8 pcs.

SENSOR TECHNOLOGY

Max. mounting height	4,00 m
Sensor technology	High frequency
Transmission power	< 1 mW
HF technology	5,8 GHz
Detection	also through glass, wood and stud walls
Detection angle	360 °
Opening angle	180 °
Sneak-under protection	Yes
Segment-by-segment masking	No
Electronic scalability	Yes
Mechanical scalability	No
Radial range	Ø 8 m (50 m²)
Tangential range	Ø 8 m (50 m²)
Mounting height	2,0 – 4,0 m
Optimal mounting height	2,8 m

CONNECTIVITY

Networking	Yes
Type of networking	Master/Master
Networking via	Cable

LIGHTING TECHNOLOGY

Soft light start	No
Continuous light	selectable, 4h
Constant light regulation	No

SETTINGS

Twilight switch	Yes
Twilight setting	2 – 1000 lx
Time setting	5 s – 15 min
Base light function	No
Main light adjustable	No
Functions	Normal / test mode, Manual ON / ON-OFF
Settings via	Remote control, Potentiometers, Smart Remote
With remote control	No
Twilight setting teach	Yes

HOUSING & MATERIAL

Protection class (IP)	IP54
Ambient temperature	-20...+50 °C
Mounting location	ceiling, corner, wall
Application location	Indoors
Mounting type	Surface mounting
Material	Plastic
Application room	Indoors, WC / washroom, function room / ancillary room, multi-storey / underground car park, stairwell
Colour	White
RAL colour	9003

SCOPE OF DELIVERY & WARRANTY

Manufacturer warranty	5 years
Corner wall bracket included	No

HF 3360 COM1 - surface, rd.

MOTION DETECTOR

EAN **4007841033668**
E-Nr. **535940560**

Illustrations

TECHNICAL DRAWINGS

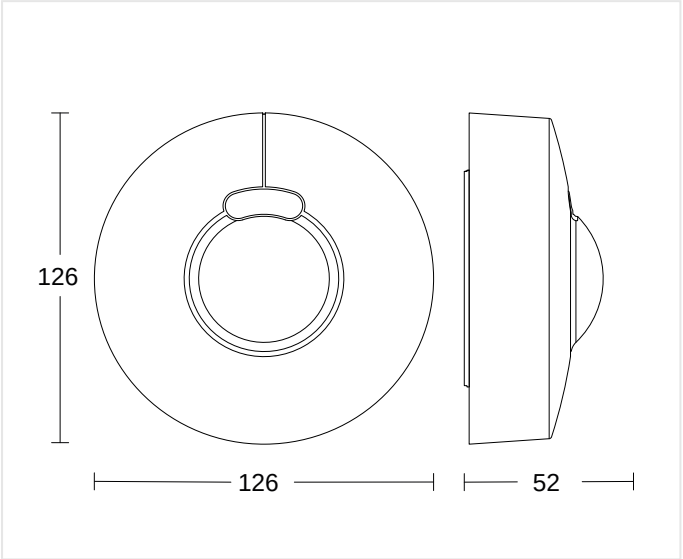

126 x 52 mm

MOUNTING HEIGHT

2,0 – 4,0 m	2,8 m	4,00 m
BEREICH	OPTIMAL	MAX

HF 3360 COM1 - surface, rd.

MOTION DETECTOR

EAN 4007841033668
E-Nr. 535940560

Wiring Diagrams

WIRING DIAGRAM 1

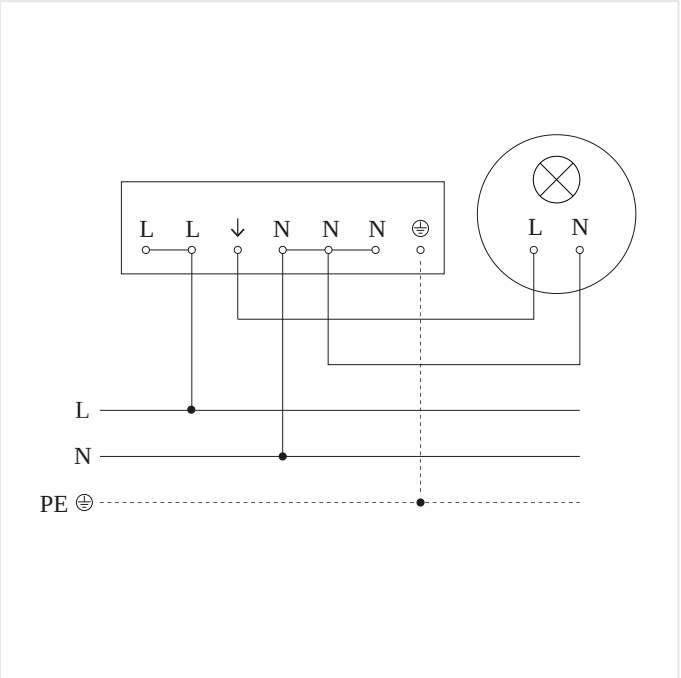

Master circuit diagram

WIRING DIAGRAM 2

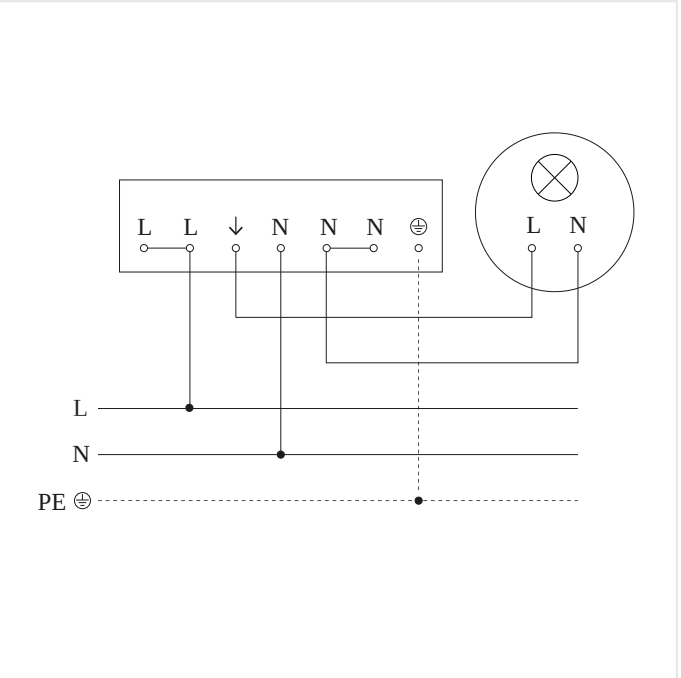

Master/slave interconnection circuit diagram

HF 3360 COM1 - surface, rd.

MOTION DETECTOR

EAN 4007841033668
E-Nr. 535940560

Accessories

	ARTICLE NUMBER	DESCRIPTION	CATEGORY
	4007841009151	**Smart Remote**	Accessory
	4007841559410	**Service Fernbedienung RC8**	Accessory
	4007841056698	**Schwarze Blende für den HF 3360 Aufputz rund**	Accessory
	4007841056674	**Schwarze Blende für den HF 3360 Aufputz eckig**	Accessory

ORDERING INFORMATION

Art.-Nr.	4007841033668
EAN	4007841033668
E-Number	535940560
Typ	**HF 3360 COM1 - surface, rd.**

neva lux

nevalux AG
Neugrütstrasse 2
8610 Uster
+41 44 508 78 78
info@nevalux.swiss