DL Vario Quattro PRO S warm white silver

SENSOR-SWITCHED LED OUTDOOR LIGHT

EAN 4007841035433
E-Nr. 941300159

- Including STEINEL LED system
- Integrated sensor lenses
- 4 infrared sensors adjustable in every direction
- Reach adjusts in 4directions
- 4-hour manual override (optional)
- Impact-resistant material rated to IK07
- Interconnectable by cable (maximum of 10 units)

steinel

310 x 69 mm



DL Vario Quattro PRO S warm white silver

SENSOR-SWITCHED LED OUTDOOR LIGHT

EAN **4007841035433**
E-Nr. **941300159**

Technical Data

DIMENSIONS

Dimensions Ø × H	**310 x 69 mm**

ELECTRICAL

Mains connection	**230 V / 50 – 60 Hz**
Power	**14 W**
Fluorescent lamps ECG	**500 W**
Fluorescent lamps uncompensated	**500 VA**
Fluorescent lamps series-compensated	**500 VA**
Fluorescent lamps parallel-compensated	**500 VA**
Switching output 1 low-voltage halogen lamps	**500 VA**
LED lamps < 2 W	**16 W**
LED lamps > 2 W < 8 W	**64 W**
LED lamps > 8 W	**64 W**
Capacitive load in µF	**88 µF**
Own consumption	**0,5 W**

SENSOR TECHNOLOGY

Max. mounting height	**6,00 m**
Sensor technology	**passive infrared**
With motion detector	**Yes**
Detection angle	**360 °**
Opening angle	**180 °**
Sneak-under protection	**Yes**
Segment-by-segment masking	**No**
Electronic scalability	**No**
Mechanical scalability	**Yes**
Range detail	**Reach adjustable from 2 - 8 m in 4 directions (90° in each)**
Radial range	**6 x 6 m (36 m²)**
Tangential range	**16 x 16 m (256 m²)**
Mounting height	**2,0 – 6,0 m**
Optimal mounting height	**2,8 m**

CONNECTIVITY

Networking	**Yes**
Type of networking	**Master/Master**
Networking quantity	**10 lights max.**
Slave mode adjustable	**No**
Networking via	**Cable**

LIGHTING TECHNOLOGY

Measured luminous flux 360°	**1430 lm**
Efficiency	**102 lm/W**
Colour temperature	**3000 K**
LED colour deviation	**SDCM3**
Colour rendering index	**80 - 89**
With illuminant	**Yes, STEINEL LED system**
Illuminant	**LED cannot be replaced**
Base	**without**
LED cooling system	**Passive Thermo Control**
Soft light start	**Yes**
Continuous light	**selectable, 4h**

LIFETIME

LED lifetime max. °C	**50000 h**
LED lifetime L70B50 25°C	**> 60000 h**

SETTINGS

Twilight switch	**Yes**
Twilight setting	**2 – 1000 lx**
Time setting	**5 s – 30 min**
Base light function	**Yes**
Base light function time	**10/30 min, all night**
Settings via	**Potentiometers**
With remote control	**No**
Twilight setting teach	**No**
Base light function in percent	**10 %**
Base light function percent from	**10 %**

HOUSING & MATERIAL

Impact resistance	**IK07**
Protection class (IP)	**IP54**
Protection class	**II**
Ambient temperature	**-20...+35 °C**
Housing material	**Plastic**
Cover material	**Structured plastic**
Mounting location	**ceiling**
Application location	**Outdoors**
Mounting type	**Surface mounting**
Material	**Plastic**
Application room	**Indoors, corridor / aisle, courtyard & driveway, front door, function room / ancillary room, outdoors, stairwell**
Colour	**Silver**

SCOPE OF DELIVERY & WARRANTY

Manufacturer warranty	**5 years**

CERTIFICATES & EPREL

Certificates	**DEKRA\nEMC**
EPREL category	**Surrounded product with integrated light source**

DL Vario Quattro PRO S warm white silver

SENSOR-SWITCHED LED OUTDOOR LIGHT

EAN **4007841035433**
E-Nr. **941300159**

Illustrations

TECHNICAL DRAWINGS

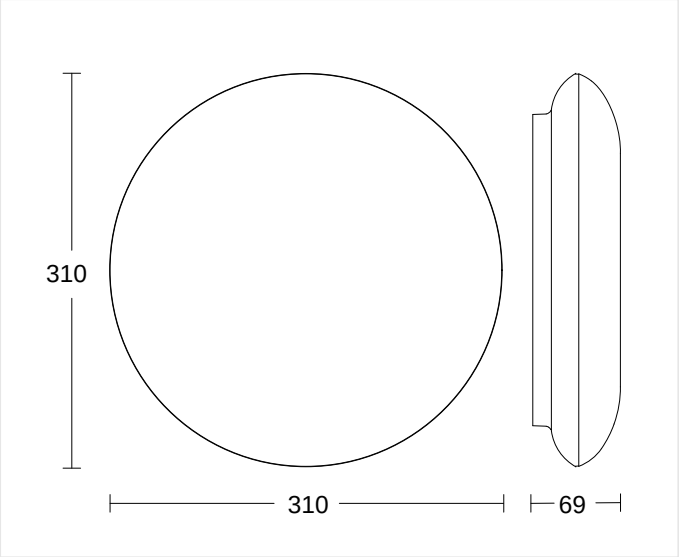

310 x 69 mm

MOUNTING HEIGHT

2,0 – 6,0 m	2,8 m	6,00 m
BEREICH	OPTIMAL	MAX

DL Vario Quattro PRO S warm white silver

SENSOR-SWITCHED LED OUTDOOR LIGHT

EAN **4007841035433**
E-Nr. **941300159**

Wiring Diagrams

WIRING DIAGRAM 1

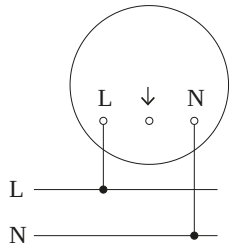

Master circuit diagram

WIRING DIAGRAM 2

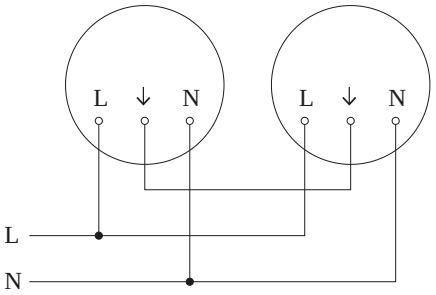

Master/master interconnection circuit diagram

DL Vario Quattro PRO S warm white silver

SENSOR-SWITCHED LED OUTDOOR LIGHT

EAN **4007841035433**
E-Nr. **941300159**

Accessories

ORDERING INFORMATION

Art.-Nr.	4007841035433
EAN	4007841035433
E-Number	941300159
Typ	**DL Vario Quattro PRO S warm white silver**

neva lux

nevalux AG
Neugrütstrasse 2
8610 Uster
+41 44 508 78 78
info@nevalux.swiss