RS PRO LED S2 PMMA Neutral white

SENSOR-SWITCHED LED INDOOR LIGHT

EAN 4007841035839
E-Nr. 941309759

- Including STEINEL LED system
- Intelligent LED cooling system
- Smart Remote remote control optional
- Optional basic lighting level 10 - 20%
- Wireless interconnection
- High-quality aluminium

steinel

350 x 83 mm



RS PRO LED S2 PMMA Neutral white

SENSOR-SWITCHED LED INDOOR LIGHT

EAN **4007841035839**
E-Nr. **941309759**

Technical Data

IDENTIFICATION

Variant	**PMMA Neutral white**

DIMENSIONS

Dimensions Ø × H	**350 x 83 mm**

ELECTRICAL

Mains connection	**230 V / 50 – 60 Hz**
Power	**26 W**
Own consumption	**1,2 W**

SENSOR TECHNOLOGY

Sensor technology	**High frequency**
Transmission power	**< 1 mW**
HF technology	**5,8 GHz**
With motion detector	**Yes**
Detection	**also through glass, wood and stud walls**
Detection angle	**360 °**
Opening angle	**160 °**
Segment-by-segment masking	**Yes**
Electronic scalability	**Yes**
Mechanical scalability	**No**
Radial range	**Ø 8 m (50 m²)**

CONNECTIVITY

Networking	**Yes**
Type of networking	**Master/Slave, Master/Master**

LIGHTING TECHNOLOGY

Colour temperature	**4000 K**
LED colour deviation	**SDCM3**
Colour rendering index	**80 - 89**
With illuminant	**Yes, STEINEL LED system**
Illuminant	**LED cannot be replaced**
Base	**without**
LED cooling system	**Active Thermo Control**
Soft light start	**Yes**
Continuous light	**selectable, 4h**
Luminous flux	**2626 lm**

LIFETIME

LED lifetime max. °C	**70000 h**
Luminous flux decline per LM80	**L80B10**

SETTINGS

Twilight switch	**Yes**
Twilight setting	**2 – 2000 lx**
Time setting	**5 s – 15 min**
Base light function	**Yes**
Base light function time	**10/30 min, all night**
Functions	**Neighbouring-group function, Presence function, Group parameterisation, Manual ON / ON-OFF**
Settings via	**DIP switches, Potentiometers, Remote control, Smart Remote**
With remote control	**No**

HOUSING & MATERIAL

Impact resistance	**IK03**
Protection class (IP)	**IP20**
Protection class	**II**
Ambient temperature	**-10...+50 °C**
Housing material	**Aluminium**
Cover material	**Opal plastic**

SCOPE OF DELIVERY & WARRANTY

Manufacturer warranty	**5 years**

RS PRO LED S2 PMMA Neutral white

SENSOR-SWITCHED LED INDOOR LIGHT

EAN **4007841035839**
E-Nr. **941309759**

Illustrations

TECHNICAL DRAWINGS

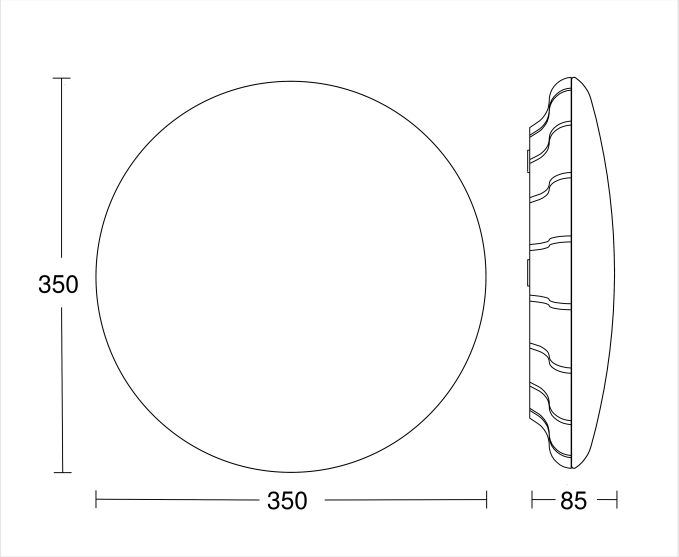

350 x 83 mm

RS PRO LED S2 PMMA Neutral white

SENSOR-SWITCHED LED INDOOR LIGHT

EAN **4007841035839**
E-Nr. **941309759**

Wiring Diagrams

WIRING DIAGRAM 1

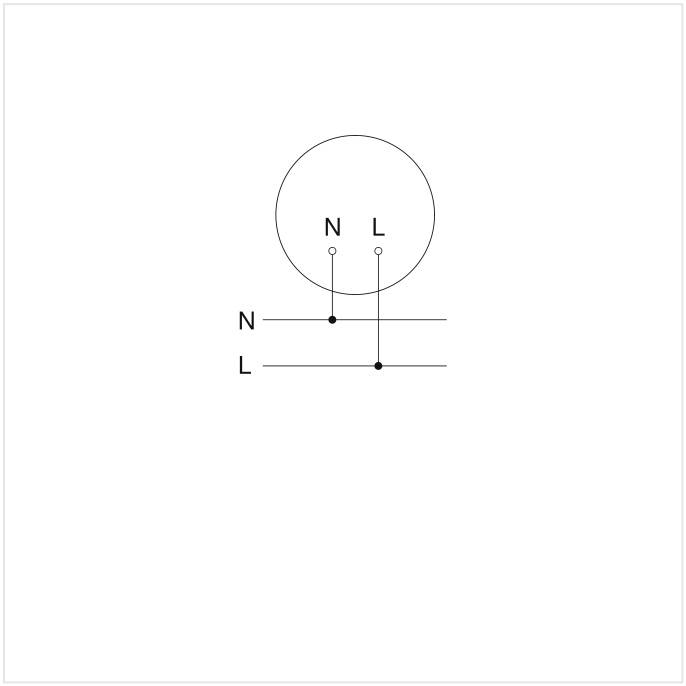

Slave/wireless master interconnection circuit diagram

WIRING DIAGRAM 2

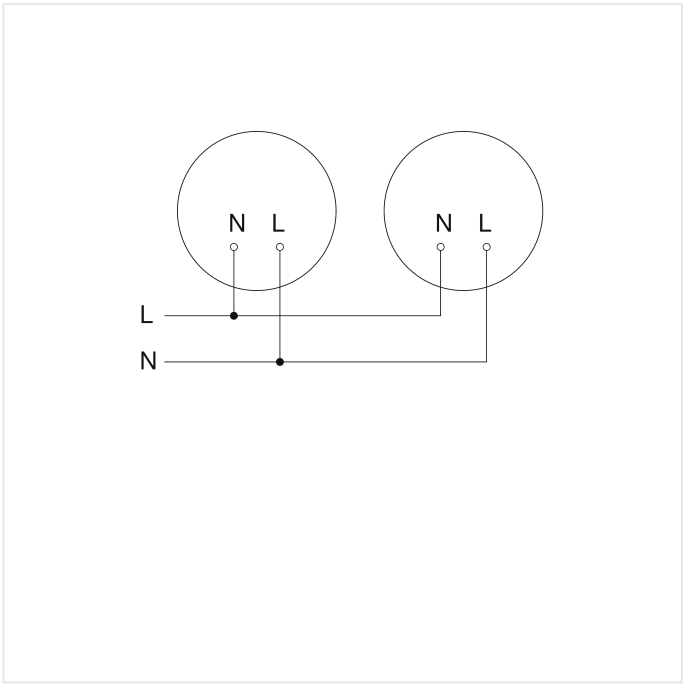

Master/master interconnection circuit diagram

RS PRO LED S2 PMMA Neutral white

SENSOR-SWITCHED LED INDOOR LIGHT

EAN **4007841035839**
E-Nr. **941309759**

Accessories

	ARTICLE NUMBER	DESCRIPTION	CATEGORY
	4007841009151	**Smart Remote**	Accessory

ORDERING INFORMATION

Art.-Nr.	4007841035839
EAN	4007841035839
E-Number	941309759
Typ	**RS PRO LED S2 PMMA Neutral white**

nevalux AG
Neugrütstrasse 2
8610 Uster
+41 44 508 78 78
info@nevalux.swiss