RS PRO Connect 5100 LED Slave

LED INDOOR LIGHT WITHOUT SENSOR

EAN 4007841052904
E-Nr. 941000049

- Including STEINEL LED system
- Interconnectable and adjustable via Bluetooth
- Impact-resistant material rated to IK07
- Optional basic lighting level 10 - 50 %
- Optional main light level 50 - 100%
- Adjustable mounts for easy installation

58 x 1370 x 87 mm



RS PRO Connect 5100 LED Slave

LED INDOOR LIGHT WITHOUT SENSOR

EAN **4007841052904**
E-Nr. **941000049**

Technical Data

DIMENSIONS

Dimensions L × W × H	**58 x 1370 x 87 mm**

ELECTRICAL

Mains connection	**230 V / 50 – 60 Hz**
Power	**30 W**
Own consumption	**0,4 W**

SENSOR TECHNOLOGY

With motion detector	**No**
Electronic scalability	**Yes**

LIGHTING TECHNOLOGY

Measured luminous flux 360°	**4206 lm**
Colour temperature	**4000 K**
LED colour deviation	**SDCM3**
Colour rendering index	**80 - 89**
With illuminant	**Yes, STEINEL LED system**
Illuminant	**LED cannot be replaced**
Base	**without**
LED cooling system	**Passive Thermo Control**
Soft light start	**No**
Continuous light	**selectable**

LIFETIME

LED lifetime max. °C	**60000 h**
Luminous flux decline per LM80	**L80B10**

SETTINGS

Twilight switch	**No**
Base light function	**Yes**
Base light function time	**10-30 min, all night**
Main light adjustable	**50 - 100 %**
Settings via	**App, Smartphone, Tablet, Bluetooth**
With remote control	**No**
Twilight setting teach	**No**
Base light function in percent	**10 – 50 %**
Base light function percent from	**10 %**

HOUSING & MATERIAL

Impact resistance	**IK07**
Protection class (IP)	**IP66**
Protection class	**II**
Ambient temperature	**-20...+40 °C**
Housing material	**Plastic**
Cover material	**Structured plastic**
Mounting location	**ceiling, wall**
Application location	**Indoors**
Mounting type	**Surface mounting**
Application room	**Indoors, WC / washroom, changing room, corridor / aisle, function room / ancillary room, kitchenette, outdoors, stairwell**
Colour	**Gray**

SCOPE OF DELIVERY & WARRANTY

Manufacturer warranty	**5 years**

CERTIFICATES & EPREL

Certificates	**DEKRA**

RS PRO Connect 5100 LED Slave

LED INDOOR LIGHT WITHOUT SENSOR

EAN **4007841052904**
E-Nr. **941000049**

Illustrations

TECHNICAL DRAWINGS

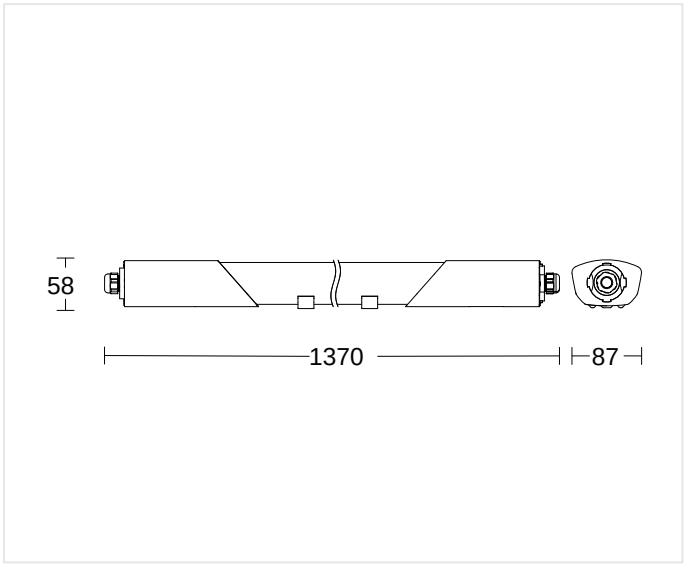

58 x 1370 x 87 mm

RS PRO Connect 5100 LED Slave

LED INDOOR LIGHT WITHOUT SENSOR

EAN **4007841052904**
E-Nr. **941000049**

Wiring Diagrams

WIRING DIAGRAM 1

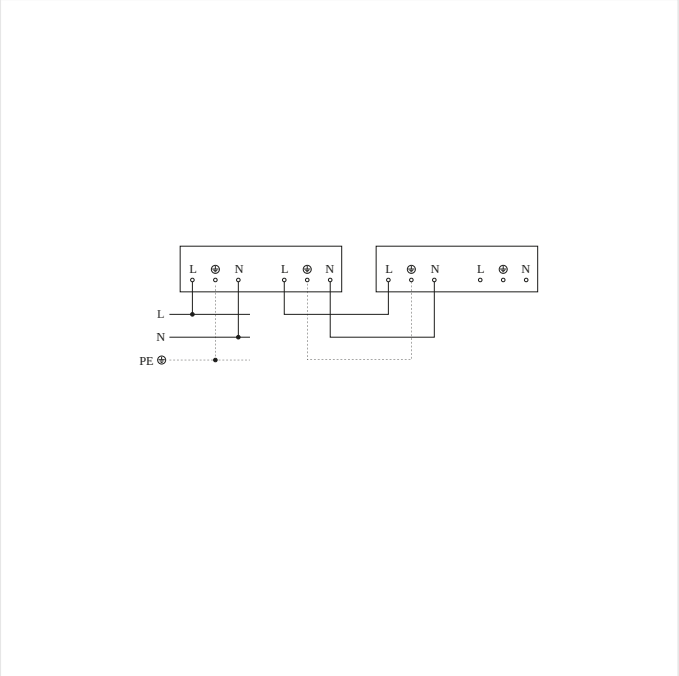

Master/slave interconnection circuit diagram

RS PRO Connect 5100 LED Slave

LED INDOOR LIGHT WITHOUT SENSOR

EAN **4007841052904**
E-Nr. **941000049**

Accessories

ORDERING INFORMATION

Art.-Nr.	4007841052904
EAN	4007841052904
E-Number	941000049
Typ	**RS PRO Connect 5100 LED Slave**

neva lux

nevalux AG
Neugrütstrasse 2
8610 Uster
+41 44 508 78 78
info@nevalux.swiss