L 710 N Anthracite

PHOTO-CELL-CONTROLLED LIGHT

EAN 4007841053161
E-Nr. 941200099

- Including STEINEL LED system
- Intelligent soft light start
- UV-resistant plastic
- High-quality aluminium

steinel

140 x 260 x 63 mm



L 710 N Anthracite

PHOTO-CELL-CONTROLLED LIGHT

EAN **4007841053161**
E-Nr. **941200099**

Technical Data

DIMENSIONS

Dimensions L × W × H	**140 x 260 x 63 mm**

ELECTRICAL

Mains connection	**230 V / 50 – 60 Hz**
Power	**8,3 W**

SENSOR TECHNOLOGY

Sensor technology	**Light sensor**
With motion detector	**No**
Sneak-under protection	**No**
Segment-by-segment masking	**No**
Electronic scalability	**No**
Mechanical scalability	**No**

CONNECTIVITY

Networking	**No**
Slave mode adjustable	**No**

LIGHTING TECHNOLOGY

Measured luminous flux 360°	**729 lm**
Efficiency	**88 lm/W**
Colour temperature	**3000 K**
Colour rendering index	**80 - 89**
With illuminant	**Yes, STEINEL LED system**
Illuminant	**LED cannot be replaced**
Base	**without**
LED cooling system	**Passive Thermo Control**
Soft light start	**Yes**

LIFETIME

LED lifetime max. °C	**50000 h**
LED lifetime L70B50 25°C	**> 60000 h**
Average rated power supply lifetime at 25 °C	**> 60000 h**

SETTINGS

Twilight switch	**Yes**
Twilight setting	**2 – 2000 lx**
Base light function	**No**
Functions	**Light sensor**
Settings via	**Potentiometers**
With remote control	**No**
Twilight setting teach	**No**

HOUSING & MATERIAL

Impact resistance	**IK03**
Protection class (IP)	**IP44**
Protection class	**II**
Ambient temperature	**-20...+40 °C**
Housing material	**Aluminium**
Cover material	**Opal plastic**
Cover material (scope of delivery)	**Sticker**
Mounting location	**Wall**
Application location	**Outdoors**
Mounting type	**Surface mounting**
Material	**Plastic**
Application room	**all round the building, front door, outdoors, terrace / balcony**
Colour	**Anthracite**

SCOPE OF DELIVERY & WARRANTY

Manufacturer warranty	**3 years**
House number sheet included	**No**

CERTIFICATES & EPREL

EPREL category	**Surrounded product with integrated light source**

L 710 N Anthracite

PHOTO-CELL-CONTROLLED LIGHT

EAN **4007841053161**
E-Nr. **941200099**

Illustrations

TECHNICAL DRAWINGS

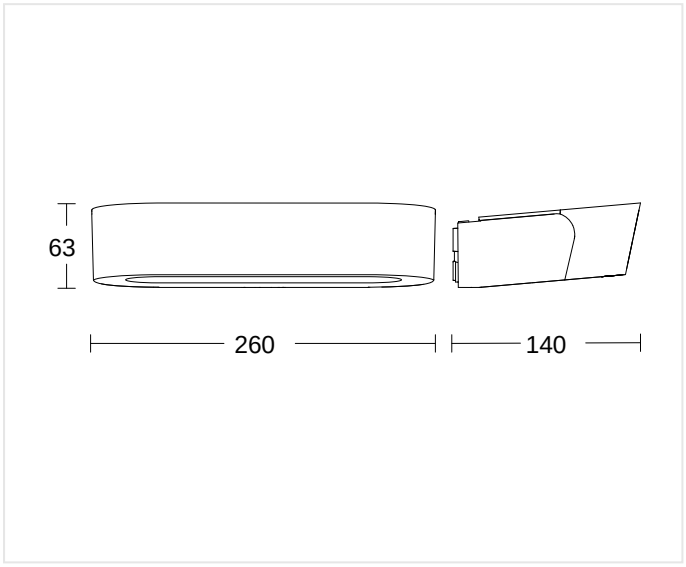

140 x 260 x 63 mm

L 710 N Anthracite

PHOTO-CELL-CONTROLLED LIGHT

EAN **4007841053161**
E-Nr. **941200099**

Wiring Diagrams

WIRING DIAGRAM 1

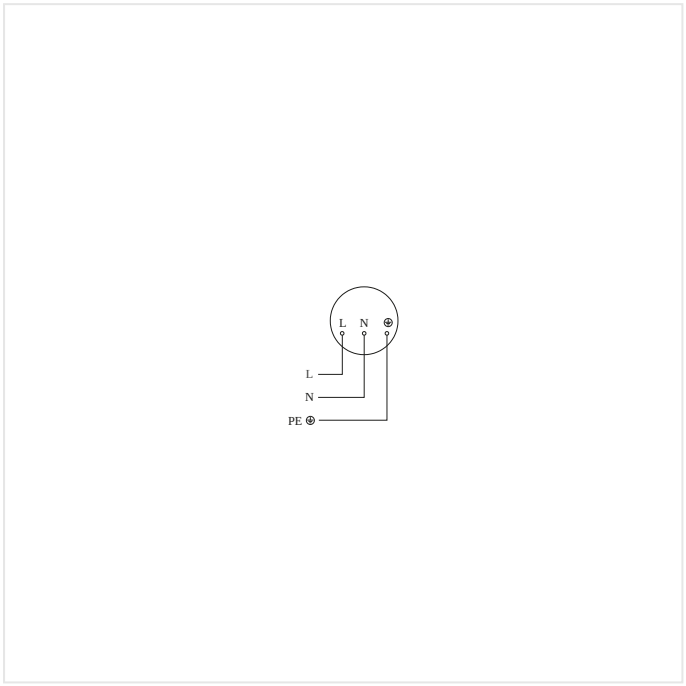

Circuit diagram

L 710 N Anthracite

PHOTO-CELL-CONTROLLED LIGHT

EAN **4007841053161**
E-Nr. **941200099**

Accessories

ORDERING INFORMATION

Art.-Nr.	4007841053161
EAN	4007841053161
E-Number	941200099
Typ	**L 710 N Anthracite**

nevalux AG
Neugrütstrasse 2
8610 Uster
+41 44 508 78 78
info@nevalux.swiss