L 710 S Anthracite

SENSOR-SWITCHED LED OUTDOOR LIGHT

EAN 4007841053185
E-Nr. 941200119

- Including STEINEL LED system
- Intelligent soft light start
- UV-resistant plastic
- High-quality aluminium
- Optional basic lighting level 10 %
- 4-hour manual override (optional)
- Sensor with 4 intelligent programmes

steinel

140 x 260 x 77 mm



L 710 S Anthracite

SENSOR-SWITCHED LED OUTDOOR LIGHT

EAN **4007841053185**
E-Nr. **941200119**

Technical Data

DIMENSIONS

Dimensions L × W × H	**140 x 260 x 77 mm**

ELECTRICAL

Mains connection	**230 V / 50 – 60 Hz**
Power	**8,3 W**

SENSOR TECHNOLOGY

Max. mounting height	**2,50 m**
Sensor technology	**passive infrared**
With motion detector	**Yes**
Sneak-under protection	**Yes**
Segment-by-segment masking	**Yes**
Electronic scalability	**No**
Mechanical scalability	**No**
Radial range	**r = 2 m (13 m²)**
Tangential range	**r = 8 m (201 m²)**
Mounting height	**1,8 – 2,5 m**
Optimal mounting height	**2,0 m**

CONNECTIVITY

Networking	**No**
Slave mode adjustable	**No**

LIGHTING TECHNOLOGY

Measured luminous flux 360°	**729 lm**
Colour temperature	**3000 K**
LED colour deviation	**SDCM3**
With illuminant	**Yes, STEINEL LED system**
Illuminant	**LED cannot be replaced**
Base	**without**
LED cooling system	**Passive Thermo Control**
Soft light start	**Yes**
Continuous light	**selectable, 4h**

LIFETIME

LED lifetime max. °C	**50000 h**
LED lifetime L70B50 25°C	**> 60000 h**

SETTINGS

Twilight switch	**Yes**
Twilight setting	**2 – 2000 lx**
Time setting	**5 s – 15 min**
Base light function	**Yes**
Functions	**4 programme settings geared to practical needs, can be selected on removable sensor module**
Settings via	**Potentiometers**
With remote control	**No**
Twilight setting teach	**No**
Base light function in percent	**10 %**
Base light function percent from	**10 %**

HOUSING & MATERIAL

Impact resistance	**IK03**
Protection class (IP)	**IP44**
Protection class	**II**
Ambient temperature	**-20...+40 °C**
Housing material	**Aluminium**
Cover material	**Opal plastic**
Cover material (scope of delivery)	**Sticker**
Mounting location	**Wall**
Application location	**Outdoors**
Mounting type	**Surface mounting**
Material	**Plastic**
Application room	**Aussenbereich, Hauseingang, Rund ums Haus, Terrasse / Balkon**
Colour	**Anthracite**

SCOPE OF DELIVERY & WARRANTY

Manufacturer warranty	**3 years**

CERTIFICATES & EPREL

EPREL category	**Surrounded product with integrated light source**

L 710 S Anthracite

SENSOR-SWITCHED LED OUTDOOR LIGHT

EAN **4007841053185**
E-Nr. **941200119**

Illustrations

TECHNICAL DRAWINGS

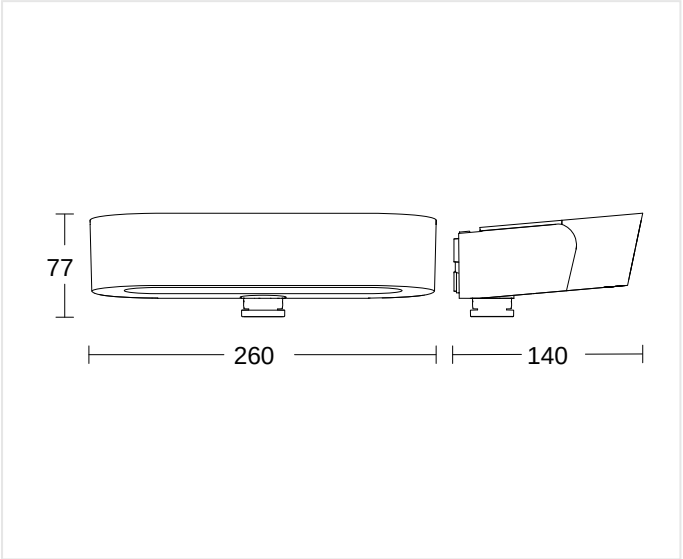

140 x 260 x 77 mm

MOUNTING HEIGHT

1,8 – 2,5 m	2,0 m	2,50 m
BEREICH	OPTIMAL	MAX

L 710 S Anthracite

SENSOR-SWITCHED LED OUTDOOR LIGHT

EAN **4007841053185**
E-Nr. **941200119**

Wiring Diagrams

WIRING DIAGRAM 1

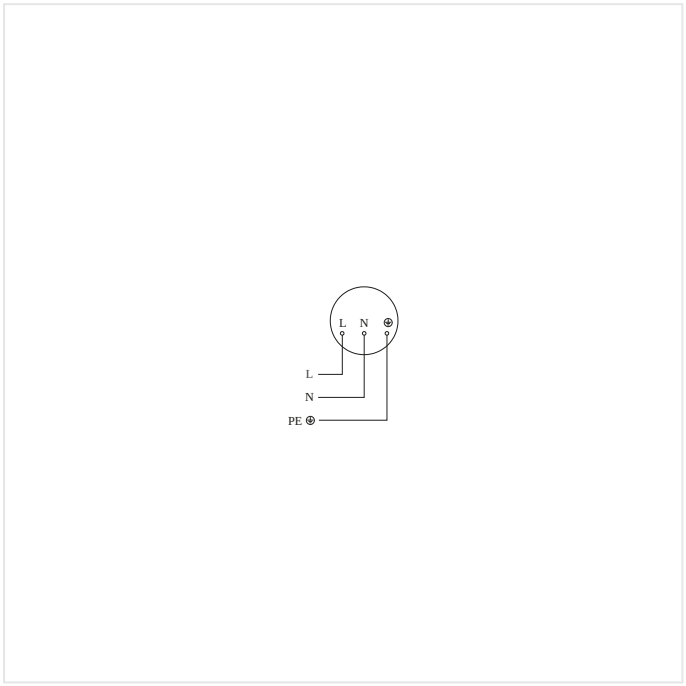

Circuit diagram

L 710 S Anthracite

SENSOR-SWITCHED LED OUTDOOR LIGHT

EAN **4007841053185**
E-Nr. **941200119**

Accessories

ORDERING INFORMATION

Art.-Nr.	4007841053185
EAN	4007841053185
E-Number	941200119
Typ	**L 710 S Anthracite**

neva lux

nevalux AG
Neugrütstrasse 2
8610 Uster
+41 44 508 78 78
info@nevalux.swiss