L 665 S Anthracite

SENSOR-SWITCHED LED OUTDOOR LIGHT

EAN 4007841053949
E-Nr. 941200249

- Including STEINEL LED system
- Intelligent soft light start
- Optional basic lighting level 10 %
- Sensor with 4 intelligent programmes
- High-quality aluminium
- Including sheet of self-adhesive house numbers
- Interconnectable by cable (K-line)
- Panel can be moved to the left or right

steinel

122 x 326 x 269 mm



L 665 S Anthracite

SENSOR-SWITCHED LED OUTDOOR LIGHT

EAN **4007841053949**
E-Nr. **941200249**

Technical Data

DIMENSIONS

Dimensions L × W × H	**122 x 326 x 269 mm**

ELECTRICAL

Mains connection	**230 V / 50 – 60 Hz**
Power	**10,4 W**
Power detail	**1 W LED house number illumination**

SENSOR TECHNOLOGY

Max. mounting height	**2,50 m**
Sensor technology	**passive infrared**
With motion detector	**Yes**
Detection angle	**360 °**
Sneak-under protection	**Yes**
Segment-by-segment masking	**Yes**
Electronic scalability	**No**
Mechanical scalability	**No**
Radial range	**r = 2 m (13 m²)**
Tangential range	**r = 7 m (154 m²)**
Mounting height	**1,8 – 2,5 m**
Optimal mounting height	**2,0 m**

CONNECTIVITY

Networking	**Yes**
Slave mode adjustable	**No**
Networking via	**Cable**

LIGHTING TECHNOLOGY

Measured luminous flux 360°	**611 lm**
Efficiency	**59 lm/W**
Colour temperature	**3000 K**
LED colour deviation	**SDCM3**
Colour rendering index	**80 - 89**
With illuminant	**Yes, STEINEL LED system**
Illuminant	**LED cannot be replaced**
Base	**without**
LED cooling system	**Passive Thermo Control**
Soft light start	**Yes**
Continuous light	**selectable, 4h**

LIFETIME

LED lifetime L70B50 25°C	**> 60000 h**
Average rated power supply lifetime at 25 °C	**> 60000 h**

SETTINGS

Twilight switch	**Yes**
Twilight setting	**2 – 1000 lx**
Time setting	**5 s – 15 min**
Base light function	**Yes**
Base light function time	**10/30 min, all night**
Functions	**4 programme settings geared to practical needs, can be selected on removable sensor module**
Settings via	**Potentiometers**
With remote control	**No**
Base light function in percent	**10 %**
Base light function percent from	**10 %**

HOUSING & MATERIAL

Impact resistance	**IK07**
Protection class (IP)	**IP44**
Protection class	**I**
Ambient temperature	**-20...+50 °C**
Housing material	**Aluminium**
Cover material	**Opal plastic**
Cover material (scope of delivery)	**Cover clips**
Mounting location	**Wall**
Application location	**Outdoors**
Mounting type	**Surface mounting**
Material	**Aluminium**
Application room	**courtyard & driveway, front door, outdoors**
Colour	**Anthracite**

SCOPE OF DELIVERY & WARRANTY

Manufacturer warranty	**5 years**
House number sheet included	**Yes**

CERTIFICATES & EPREL

EPREL category	**Surrounded product with integrated light source**

L 665 S Anthracite

SENSOR-SWITCHED LED OUTDOOR LIGHT

EAN **4007841053949**
E-Nr. **941200249**

Illustrations

TECHNICAL DRAWINGS

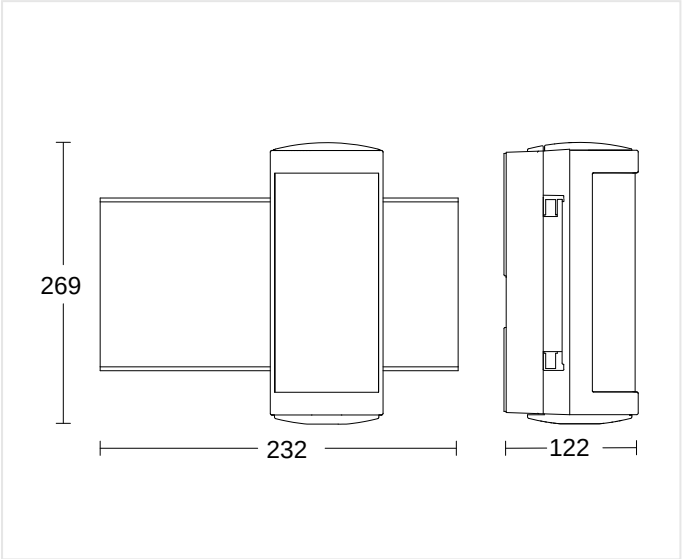

122 x 326 x 269 mm

MOUNTING HEIGHT

1,8 – 2,5 m	2,0 m	2,50 m
BEREICH	OPTIMAL	MAX

L 665 S Anthracite

SENSOR-SWITCHED LED OUTDOOR LIGHT

EAN **4007841053949**
E-Nr. **941200249**

Wiring Diagrams

WIRING DIAGRAM 1

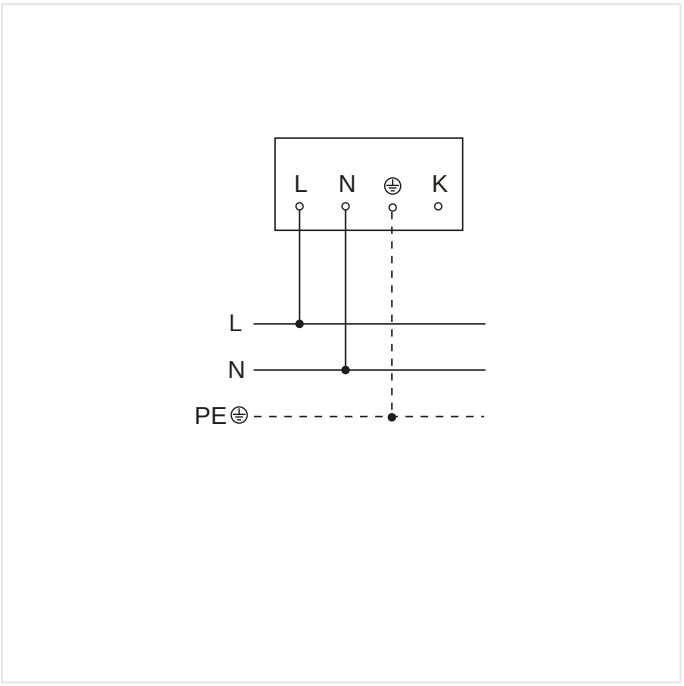

Master circuit diagram

WIRING DIAGRAM 2

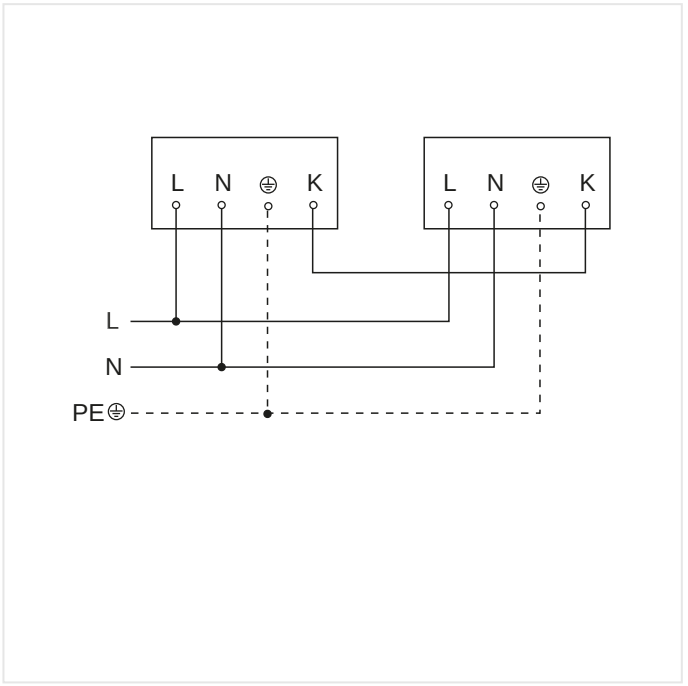

Master/master interconnection circuit diagram

L 665 S Anthracite

SENSOR-SWITCHED LED OUTDOOR LIGHT

EAN **4007841053949**
E-Nr. **941200249**

Accessories

	ARTICLE NUMBER	DESCRIPTION	CATEGORY
	4007841009014	**Ersatz-Minisensor anthrazit**	Spare Part

ORDERING INFORMATION

Art.-Nr.	4007841053949
EAN	4007841053949
E-Number	941200249
Typ	**L 665 S Anthracite**

neva lux

nevalux AG
Neugrütstrasse 2
8610 Uster
+41 44 508 78 78
info@nevalux.swiss