Multisensor Air KNX

MULTISENSOR

EAN 4007841056346
E-Nr. 535938801

- UV-resistant plastic

steinel

33 x 123 x 123 mm



Multisensor Air KNX

MULTISENSOR

EAN 4007841056346
E-Nr. 535938801

Technical Data

IDENTIFICATION

Version	Other

DIMENSIONS

Dimensions L × W × H	33 x 123 x 123 mm

ELECTRICAL

Mains connection	21 – 30 V
Own consumption	0,5 W
Supply voltage detail	KNX bus

SENSOR TECHNOLOGY

Max. mounting height	4,00 m
Sensor technology	Multisensor
With motion detector	No
Mounting height	4,0 m
Optimal mounting height	2,8 m

CONNECTIVITY

Networking	Yes
Type of networking	Master/Slave, Master/Master
KNX functions	Comfort\nCO2\nLight level\nHVAC output\nAir pressure\nHumidity output\nDewpoint\nTemperature output\nVOC\nPhoto-cell controller\nLogic gate
With bus coupler	Yes
Networking via	KNX bus

LIGHTING TECHNOLOGY

Soft light start	Yes
Continuous light	selectable
Constant light regulation	No

SETTINGS

Twilight switch	Yes
Twilight setting	2 – 1000 lx
Base light function	Yes
Main light adjustable	No
Settings via	ETS software, App, Bluetooth
With remote control	No
Twilight setting teach	Yes

HOUSING & MATERIAL

Protection class (IP)	IP20
Ambient temperature	0...+40 °C
Mounting location	ceiling
Application location	Indoors
Mounting type	Concealed mounting
Material	Plastic
Application room	Indoors, care room, classroom, conference room / meeting room, duty room, hotel room, lecture hall, one-person office, open-plan office, reception / lobby, recreation room, sports hall
Colour	White
RAL colour	9016

SCOPE OF DELIVERY & WARRANTY

Manufacturer warranty	5 years
Corner wall bracket included	No

Multisensor Air KNX

MULTISENSOR

EAN **4007841056346**
E-Nr. **535938801**

Illustrations

TECHNICAL DRAWINGS

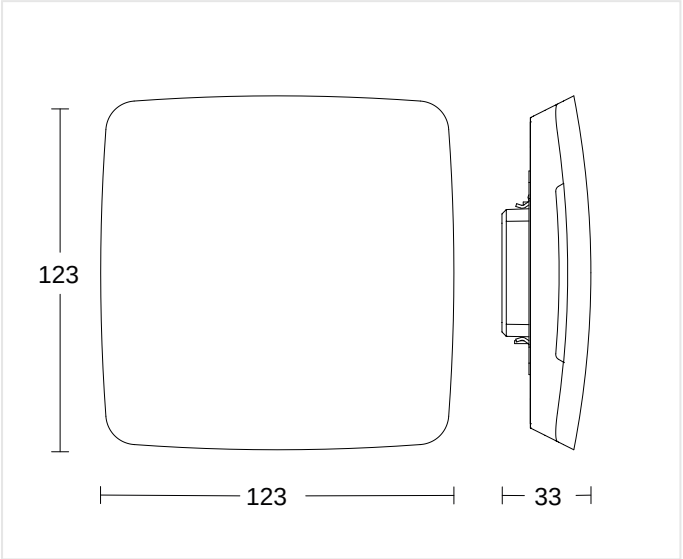

33 x 123 x 123 mm

MOUNTING HEIGHT

4,0 m	2,8 m	4,00 m
BEREICH	OPTIMAL	MAX

Multisensor Air KNX

MULTISENSOR

EAN 4007841056346
E-Nr. 535938801

Accessories

	ARTICLE NUMBER	DESCRIPTION	CATEGORY
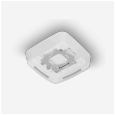	4007841063870	**Aufputz Adapter Multisensor weiss**	Accessory

ORDERING INFORMATION

Art.-Nr.	4007841056346
EAN	4007841056346
E-Number	535938801
Typ	**Multisensor Air KNX**

nevalux AG
Neugrütstrasse 2
8610 Uster
+41 44 508 78 78
info@nevalux.swiss