RS PRO Connect R20 SL warm white

INDOOR LIGHT WITHOUT SENSOR

EAN 4007841057091
E-Nr. 941301339

- Including STEINEL LED system
- Interconnectable and adjustable via Bluetooth
- Impact-resistant material rated to IK07
- Backlight function
- Optional main light level 50 - 100%
- Modern plug-in terminals for straightforward installation

steinel

350 x 55 mm



RS PRO Connect R20 SL warm white

INDOOR LIGHT WITHOUT SENSOR

EAN **4007841057091**
E-Nr. **941301339**

Technical Data

IDENTIFICATION

Variant	**warm white**

DIMENSIONS

Dimensions Ø × H	**350 x 55 mm**

ELECTRICAL

Mains connection	**230 V / 50 – 60 Hz**
Power	**16 W**

SENSOR TECHNOLOGY

With motion detector	**No**

LIGHTING TECHNOLOGY

Colour temperature	**3000 K**
LED colour deviation	**SDCM3**
Colour rendering index	**80 - 89**
With illuminant	**Yes, STEINEL LED system**
Illuminant	**LED cannot be replaced**
Base	**without**
LED cooling system	**Passive Thermo Control**
Soft light start	**Yes**
Continuous light	**selectable**
Luminous flux	**1950 lm**

LIFETIME

LED lifetime max. °C	**50000 h**
Luminous flux decline per LM80	**L80B50**
LED lifespan (25 °C)	**60000 h**

SETTINGS

Twilight switch	**No**
Base light function detail	**LED Backlight**
Functions	**Backlight**
Settings via	**App, Smartphone, Tablet, Bluetooth**
With remote control	**No**

HOUSING & MATERIAL

Impact resistance	**IK07**
Protection class (IP)	**IP40**
Protection class	**II**
Ambient temperature	**-20...+40 °C**
Housing material	**Plastic**
Cover material	**Opal PC**

SCOPE OF DELIVERY & WARRANTY

Manufacturer warranty	**5 years**

RS PRO Connect R20 SL warm white

INDOOR LIGHT WITHOUT SENSOR

EAN **4007841057091**
E-Nr. **941301339**

Illustrations

TECHNICAL DRAWINGS

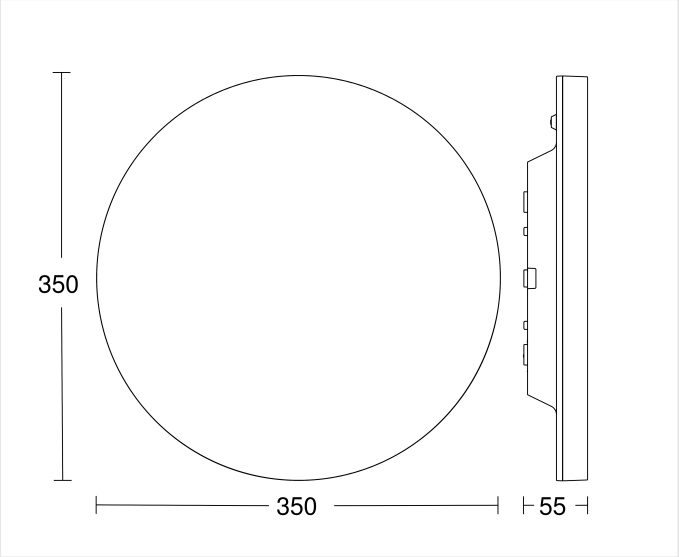

350 x 55 mm

RS PRO Connect R20 SL warm white

INDOOR LIGHT WITHOUT SENSOR

EAN **4007841057091**
E-Nr. **941301339**

Wiring Diagrams

WIRING DIAGRAM 1

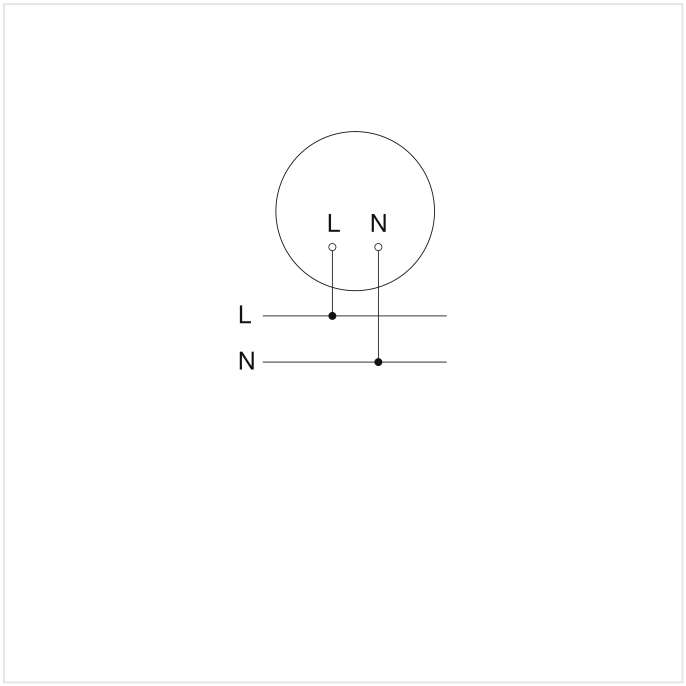

Slave/wireless master interconnection circuit diagram

WIRING DIAGRAM 2

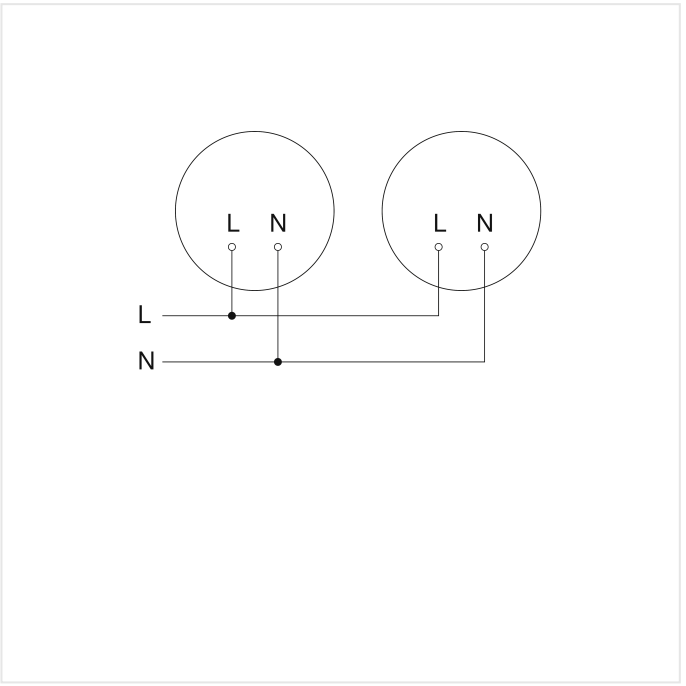

Master/master interconnection circuit diagram

RS PRO Connect R20 SL warm white

INDOOR LIGHT WITHOUT SENSOR

EAN **4007841057091**
E-Nr. **941301339**

Accessories

	ARTICLE NUMBER	DESCRIPTION	CATEGORY
	4007841057107	**RS PRO Connect R20 warmweiss**	Sensor-switched indoor light

ORDERING INFORMATION

Art.-Nr.	4007841057091
EAN	4007841057091
E-Number	941301339
Typ	**RS PRO Connect R20 SL warm white**

neva lux

nevalux AG
Neugrütstrasse 2
8610 Uster
+41 44 508 78 78
info@nevalux.swiss