RS PRO Connect R30 warm white

SENSOR-SWITCHED INDOOR LIGHT

EAN 4007841057145
E-Nr. 941301589

- Including STEINEL LED system
- Interconnectable and adjustable via Bluetooth
- Impact-resistant material rated to IK07
- Backlight function
- Optional basic lighting level 10 - 50 %
- Optional main light level 50 - 100%
- Optional emergency light

steinel

420 x 55 mm



RS PRO Connect R30 warm white

SENSOR-SWITCHED INDOOR LIGHT

EAN **4007841057145**
E-Nr. **941301589**

Technical Data

IDENTIFICATION

Variant	**warm white**

DIMENSIONS

Dimensions Ø × H	**420 x 55 mm**

ELECTRICAL

Mains connection	**230 V / 50 – 60 Hz**
Power	**24,5 W**
Own consumption	**0,5 W**

SENSOR TECHNOLOGY

Sensor technology	**High frequency**
Transmission power	**< 1 mW**
HF technology	**5,8 GHz**
With motion detector	**Yes**
Detection	**also through glass, wood and stud walls**
Detection angle	**360 °**
Opening angle	**160 °**
Segment-by-segment masking	**Yes**
Electronic scalability	**Yes**
Mechanical scalability	**No**
Radial range	**Ø 10 m (79 m²)**

CONNECTIVITY

Networking	**Yes**
Type of networking	**Master/Slave**

LIGHTING TECHNOLOGY

Colour temperature	**3000 K**
LED colour deviation	**SDCM3**
Colour rendering index	**80 - 89**
With illuminant	**Yes, STEINEL LED system**
Illuminant	**LED cannot be replaced**
Base	**without**
LED cooling system	**Passive Thermo Control**
Soft light start	**Yes**
Continuous light	**selectable**
Luminous flux	**3120 lm**

LIFETIME

LED lifetime max. °C	**55000 h**
Luminous flux decline per LM80	**L80B50**
LED lifespan (25 °C)	**60000 h**

SETTINGS

Twilight switch	**Yes**
Twilight setting	**2 – 2000 lx**
Time setting	**5 s – 30 min**
Base light function	**Yes**
Base light function detail	**LED Backlight**
Base light function time	**10-30 min, all night**
Functions	**Group parameterisation, Manual ON / ON-OFF, Master/slave override, Neighbouring-group function, Presence function, Backlight**
Settings via	**App, Smartphone, Tablet, Bluetooth**
With remote control	**No**

HOUSING & MATERIAL

Impact resistance	**IK07**
Protection class (IP)	**IP40**
Protection class	**II**
Ambient temperature	**-20...+40 °C**
Housing material	**Plastic**
Cover material	**Opal PC**

SCOPE OF DELIVERY & WARRANTY

Manufacturer warranty	**5 years**

RS PRO Connect R30 warm white

SENSOR-SWITCHED INDOOR LIGHT

EAN **4007841057145**
E-Nr. **941301589**

Illustrations

TECHNICAL DRAWINGS

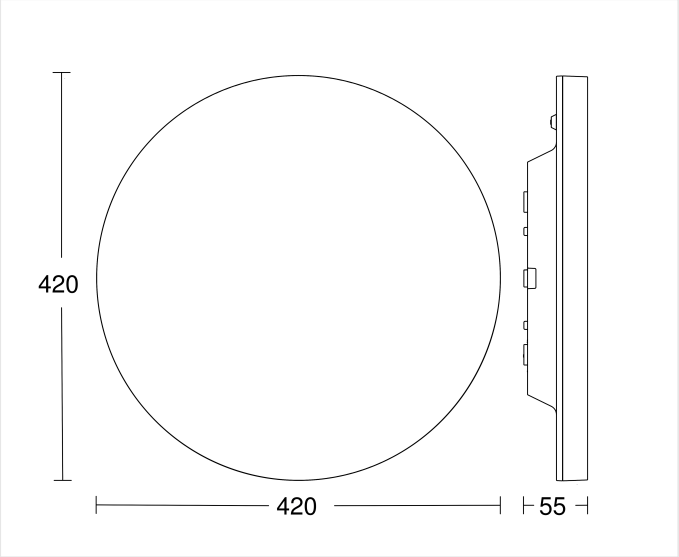

420 x 55 mm

RS PRO Connect R30 warm white

SENSOR-SWITCHED INDOOR LIGHT

EAN **4007841057145**
E-Nr. **941301589**

Wiring Diagrams

WIRING DIAGRAM 1

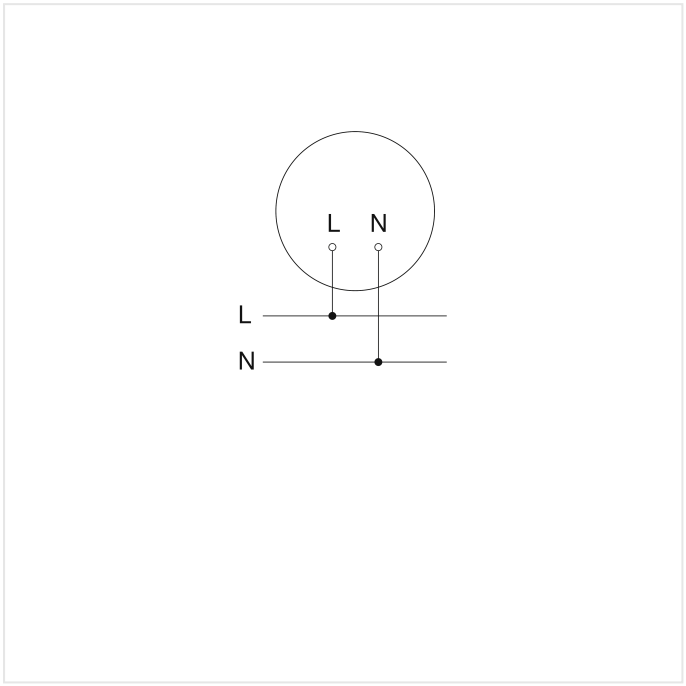

Slave/wireless master interconnection circuit diagram

WIRING DIAGRAM 2

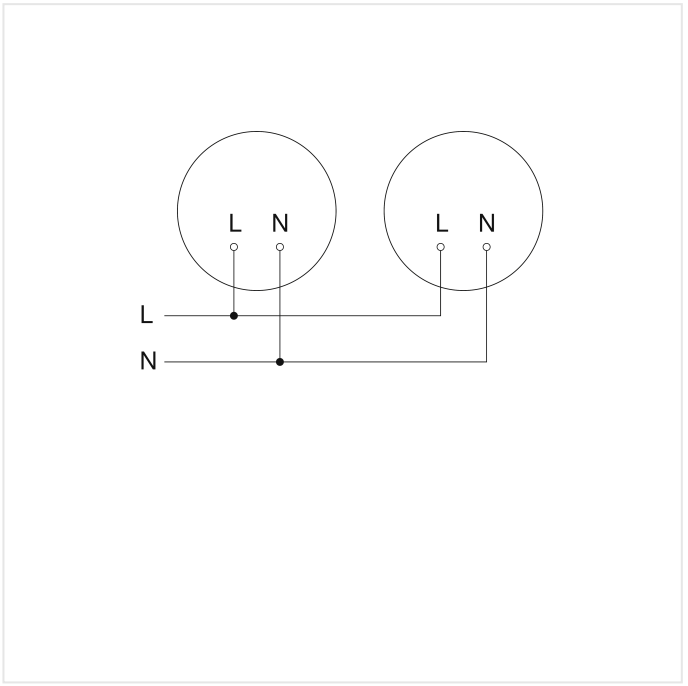

Master/master interconnection circuit diagram

RS PRO Connect R30 warm white

SENSOR-SWITCHED INDOOR LIGHT

EAN **4007841057145**
E-Nr. **941301589**

Accessories

	ARTICLE NUMBER	DESCRIPTION	CATEGORY
	4007841064143	**Notlicht-Modul R-Serie**	Accessory

ORDERING INFORMATION

Art.-Nr.	4007841057145
EAN	4007841057145
E-Number	941301589
Typ	**RS PRO Connect R30 warm white**

nevalux AG
Neugrütstrasse 2
8610 Uster
+41 44 508 78 78
info@nevalux.swiss