HF 3360 KNX - surface, sq.

MOTION DETECTOR

EAN 4007841058210
E-Nr. 535945077

- UV-resistant plastic
- Large terminal compartment
- Optional corner wall mount bracket
- Optional remote controls
- Smart Remote remote control optional

steinel

52 x 95 x 95 mm



HF 3360 KNX - surface, sq.

MOTION DETECTOR

EAN **4007841058210**
E-Nr. **535945077**

Technical Data

IDENTIFICATION

Version	**Motion detectors**

DIMENSIONS

Dimensions L × W × H	**52 x 95 x 95 mm**

ELECTRICAL

Supply voltage detail	**KNX bus**

SENSOR TECHNOLOGY

Max. mounting height	**4,00 m**
Sensor technology	**High frequency**
Transmission power	**< 1 mW**
HF technology	**5,8 GHz**
Detection	**also through glass, wood and stud walls**
Detection angle	**360 °**
Opening angle	**180 °**
Sneak-under protection	**Yes**
Segment-by-segment masking	**No**
Electronic scalability	**Yes**
Mechanical scalability	**No**
Radial range	**Ø 8 m (50 m²)**
Tangential range	**Ø 8 m (50 m²)**
Mounting height	**2,0 – 4,0 m**
Optimal mounting height	**2,8 m**

CONNECTIVITY

Networking	**Yes**
Type of networking	**Master/Slave**
KNX functions	**Photo-cell controller\nBasic light level function\nLight level\nHVAC output\nConstant-lighting control\nLight output 2x\nPresence output\nDay / night function\nLogic gate**
With bus coupler	**Yes**
Networking via	**KNX bus**

LIGHTING TECHNOLOGY

Soft light start	**Yes**
Continuous light	**selectable**
Constant light regulation	**Yes**

SETTINGS

Twilight switch	**Yes**
Twilight setting	**2 – 1000 lx**
Time setting	**5 s – 15 min**
Base light function	**Yes**
Main light adjustable	**0 - 100 %**
Settings via	**ETS software, Remote control, Smart Remote**
With remote control	**No**
Twilight setting teach	**Yes**

HOUSING & MATERIAL

Protection class (IP)	**IP54**
Ambient temperature	**-20...+50 °C**
Mounting location	**ceiling, corner, wall**
Application location	**Indoors**
Mounting type	**Surface mounting**
Material	**Plastic**
Application room	**Indoors, WC / washroom, function room / ancillary room, multi-storey / underground car park, stairwell**
Colour	**White**
RAL colour	**9003**

SCOPE OF DELIVERY & WARRANTY

Manufacturer warranty	**5 years**
Corner wall bracket included	**No**

HF 3360 KNX - surface, sq.

MOTION DETECTOR

EAN **4007841058210**
E-Nr. **535945077**

Illustrations

TECHNICAL DRAWINGS

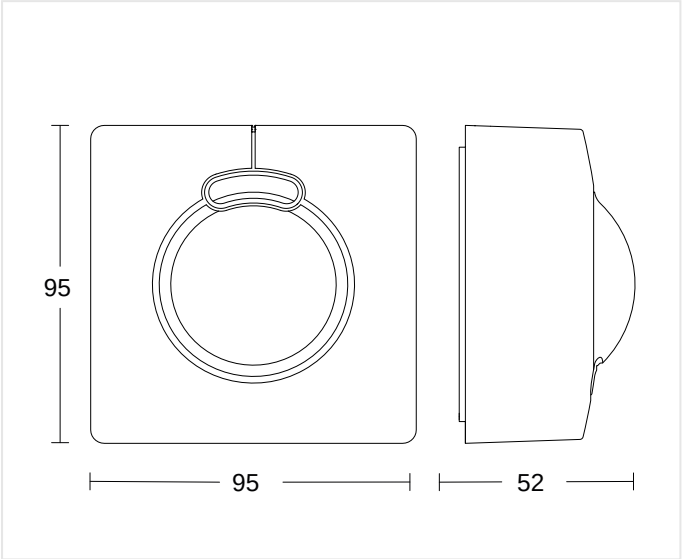

52 x 95 x 95 mm

MOUNTING HEIGHT

2,0 – 4,0 m	2,8 m	4,00 m
BEREICH	OPTIMAL	MAX

HF 3360 KNX - surface, sq.

MOTION DETECTOR

EAN 4007841058210
E-Nr. 535945077

Accessories

	ARTICLE NUMBER	DESCRIPTION	CATEGORY
	4007841593018	**Service Fernbedienung RC6 KNX**	Accessory
	4007841009151	**Smart Remote**	Accessory
	4007841035174	**Eckwandhalter 3000 weiss**	Accessory
	4007841592912	**Nutzer Fernbedienung RC7 KNX**	Accessory
	4007841056674	**Schwarze Blende für den HF 3360 Aufputz eckig**	Accessory
	4007841056698	**Schwarze Blende für den HF 3360 Aufputz rund**	Accessory

ORDERING INFORMATION

Art.-Nr.	4007841058210
EAN	4007841058210
E-Number	535945077
Typ	**HF 3360 KNX - surface, sq.**

neva lux

nevalux AG
Neugrütstrasse 2
8610 Uster
+41 44 508 78 78
info@nevalux.swiss