XLED PRO ONE without motion detector - anthracite

LED FLOODLIGHT WITHOUT SENSOR

EAN 4007841069513
E-Nr. 941502119

- High-quality aluminium
- Panel can be moved to the top or bottom
- UV resistant material
- Optional surface-mounting adapter

182 x 229 x 206 mm



XLED PRO ONE without motion detector - anthracite

LED FLOODLIGHT WITHOUT SENSOR

EAN **4007841069513**
E-Nr. **941502119**

Technical Data

DIMENSIONS

Dimensions L × W × H	**182 x 229 x 206 mm**

ELECTRICAL

Mains connection	**230 V / 50 – 60 Hz**
Power	**17,7 W**

SENSOR TECHNOLOGY

With motion detector	**No**

CONNECTIVITY

Networking	**Yes**
Type of networking	**Master/Slave**
Networking via	**Cable**

LIGHTING TECHNOLOGY

Measured luminous flux 360°	**2236 lm**
Colour temperature	**3000 K**
LED colour deviation	**SDCM3**
Colour rendering index	**80 - 89**
With illuminant	**Yes, STEINEL LED system**
Illuminant	**LED cannot be replaced**
Base	**without**
LED cooling system	**Passive Thermo Control**

LIFETIME

LED lifetime L70B50 25°C	**> 36000 h**

SETTINGS

Twilight switch	**No**
Base light function	**No**
Main light adjustable	**No**
Functions	**Relay output**
Twilight setting teach	**No**

HOUSING & MATERIAL

Impact resistance	**IK03**
Protection class (IP)	**IP44**
Protection class	**I**
Ambient temperature	**-20...+40 °C**
Housing material	**Aluminium**
Cover material	**Clear glass**
Cover material (scope of delivery)	**Cover clips**
Mounting location	**ceiling, wall**
Application location	**Outdoors**
Mounting type	**Surface mounting**
Application room	**all round the building, courtyard & driveway, front door, garden, outdoors**
Colour	**Anthracite**

SCOPE OF DELIVERY & WARRANTY

Manufacturer warranty	**5 years**
Corner wall bracket included	**No**

CERTIFICATES & EPREL

EPREL category	**Light source**

XLED PRO ONE without motion detector - anthracite

LED FLOODLIGHT WITHOUT SENSOR

EAN **4007841069513**
E-Nr. **941502119**

Illustrations

TECHNICAL DRAWINGS

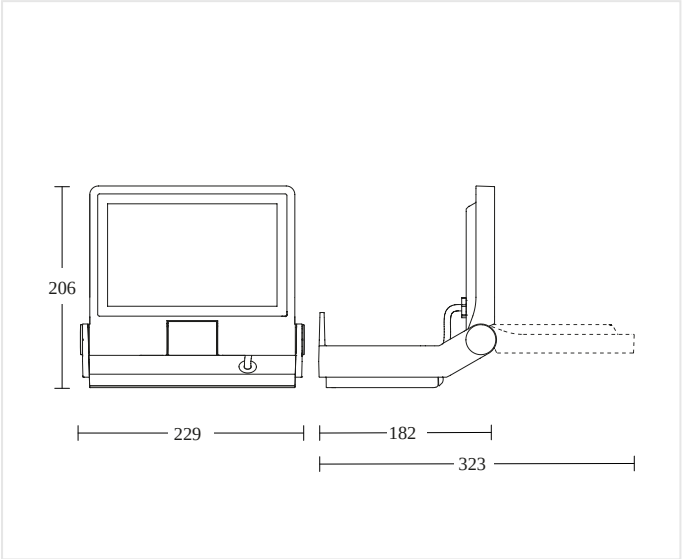

182 x 229 x 206 mm

XLED PRO ONE without motion detector - anthracite

LED FLOODLIGHT WITHOUT SENSOR

EAN **4007841069513**
E-Nr. **941502119**

Wiring Diagrams

WIRING DIAGRAM 1

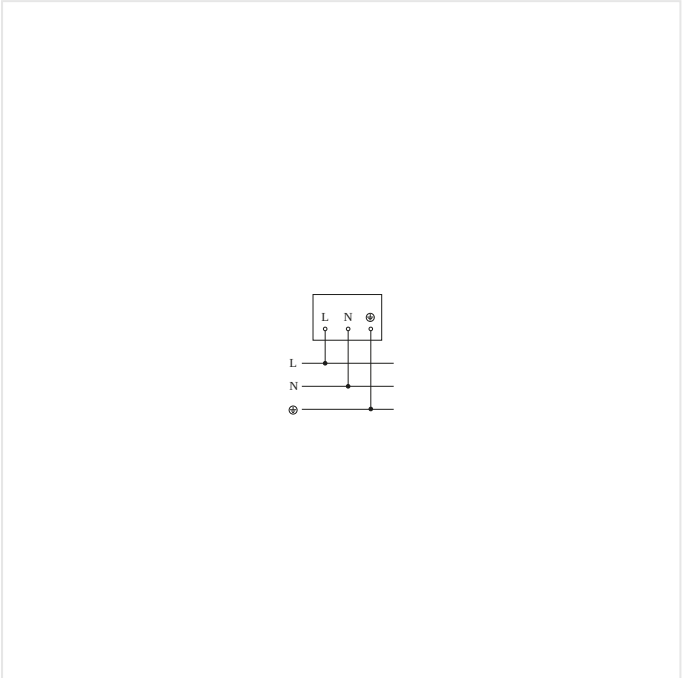

Slave circuit diagram

WIRING DIAGRAM 2

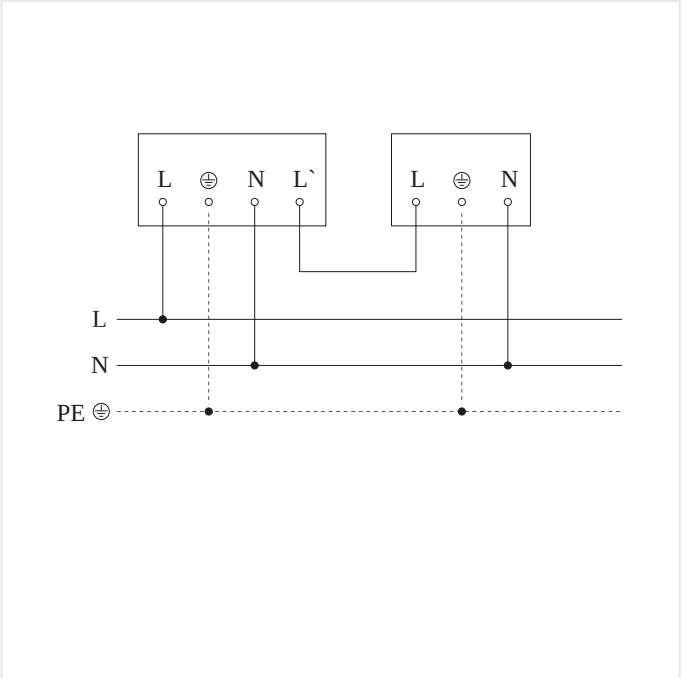

Master/slave interconnection circuit diagram

XLED PRO ONE without motion detector - anthracite

LED FLOODLIGHT WITHOUT SENSOR

EAN **4007841069513**
E-Nr. **941502119**

Accessories

	ARTICLE NUMBER	DESCRIPTION	CATEGORY
	4007841080990	**Aufputz-Adapter XLED PRO ONE anthrazit**	Accessory
	4007841079000	**RC 12**	Accessory

ORDERING INFORMATION

Art.-Nr.	4007841069513
EAN	4007841069513
E-Number	941502119
Typ	**XLED PRO ONE without motion detector - anthracite**

nevalux AG
Neugrütstrasse 2
8610 Uster
+41 44 508 78 78
info@nevalux.swiss