Hallway COM1 - Surface wiring

PRESENCE DETECTOR

EAN 4007841057978
E-Nr. 535937002

- UV-resistant plastic
- Interconnectable and adjustable via Bluetooth

steinel

62 x 123 x 123 mm



Hallway COM1 - Surface wiring

PRESENCE DETECTOR

EAN **4007841057978**
E-Nr. **535937002**

Technical Data

IDENTIFICATION

Variant	**230V, 1 channel**
Version	**Presence detector**

DIMENSIONS

Dimensions L × W × H	**62 x 123 x 123 mm**

ELECTRICAL

Mains connection	**230 V / 50 – 60 Hz**
Power	**2000 W**
Switching output 1 resistive	**2000 W**
Fluorescent lamps ECG	**1500 W**
Fluorescent lamps uncompensated	**1000 VA**
Fluorescent lamps series-compensated	**400 VA**
Fluorescent lamps parallel-compensated	**1000 VA**
Switching output 1 low-voltage halogen lamps	**2000 VA**
LED lamps < 2 W	**100 W**
LED lamps > 2 W < 8 W	**300 W**
LED lamps > 8 W	**600 W**
Capacitive load in µF	**176 µF**
Own consumption	**1 W**
Switching output 1 number of LED/fluorescent lamps	**8 pcs.**
Switching output 1 potential-free	**No**

SENSOR TECHNOLOGY

Max. mounting height	**4,00 m**
Sensor technology	**High frequency**
Transmission power	**< 1 mW**
HF technology	**5,8 GHz**
With motion detector	**Yes**
Detection	**also through glass, wood and stud walls**
Detection angle	**360 °, Corridor**
Opening angle	**140 °**
Sneak-under protection	**Yes**
Segment-by-segment masking	**No**
Electronic scalability	**Yes**
Mechanical scalability	**No**
Radial range	**25 x 3 m (75 m²)**
Tangential range	**25 x 3 m (75 m²)**
Mounting height	**2,0 – 4,0 m**
Optimal mounting height	**2,8 m**

CONNECTIVITY

Networking	**Yes**
Type of networking	**Master/Slave, Master/Master**
Control technology	**Steinel Connect**
Wireless networking via	**BT Open Mesh**
Networking via	**Bluetooth**

LIGHTING TECHNOLOGY

Soft light start	**No**
Continuous light	**selectable**
Constant light regulation	**No**

SETTINGS

Twilight switch	**Yes**
Twilight setting	**2 – 2000 lx**
Time setting	**10 s – 60 min**
Base light function	**No**
Main light adjustable	**No**
Functions	**Group parameterisation, Semi-/fully automatic, Lighting scenario, Manual ON / ON-OFF, Neighbouring group function, Normal / test mode**
Settings via	**App, Smartphone, Tablet, Bluetooth**
With remote control	**No**
Twilight setting teach	**Yes**

HOUSING & MATERIAL

Protection class (IP)	**IP54**
Ambient temperature	**-20…+50 °C**
Mounting location	**ceiling**
Application location	**Indoors**
Mounting type	**Surface mounting**
Material	**Plastic**
Application room	**Indoors, corridor / aisle**
Colour	**White**
RAL colour	**9003**

SCOPE OF DELIVERY & WARRANTY

Manufacturer warranty	**5 years**
Corner wall bracket included	**No**

Hallway COM1 - Surface wiring

PRESENCE DETECTOR

EAN **4007841057978**
E-Nr. **535937002**

Illustrations

TECHNICAL DRAWINGS

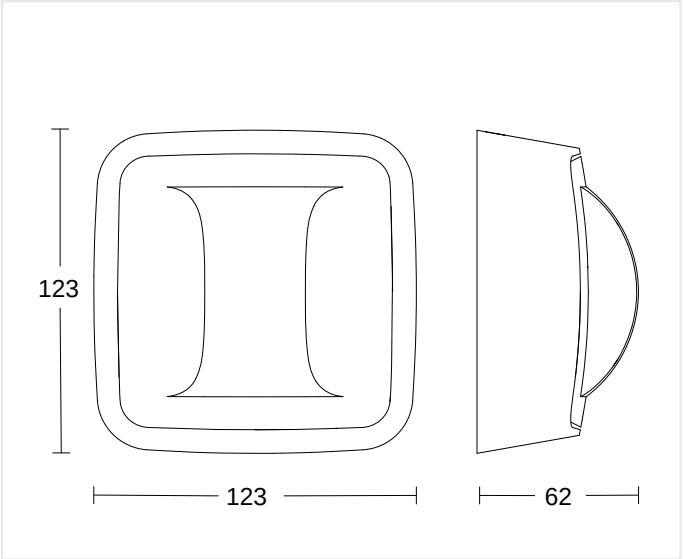

62 x 123 x 123 mm

MOUNTING HEIGHT

2,0 – 4,0 m	2,8 m	4,00 m
BEREICH	OPTIMAL	MAX

Hallway COM1 - Surface wiring

PRESENCE DETECTOR

EAN 4007841057978
E-Nr. 535937002

Wiring Diagrams

WIRING DIAGRAM 1

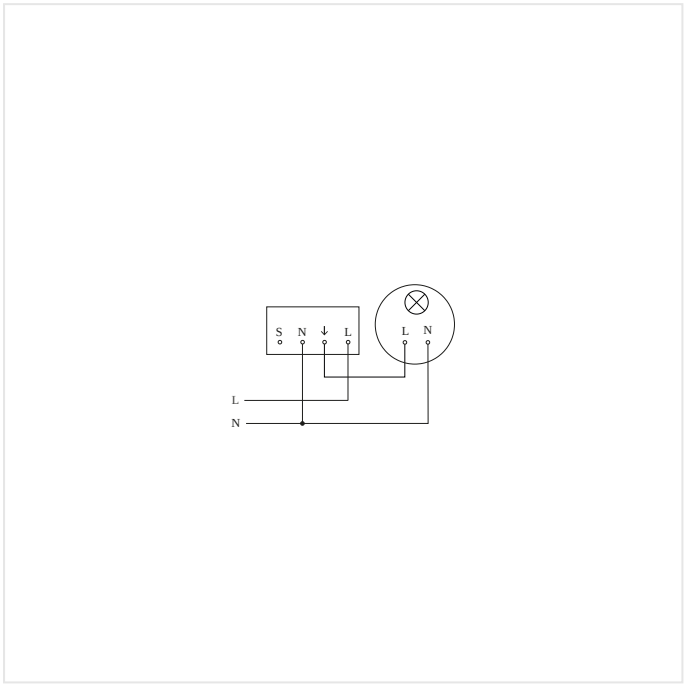

Master circuit diagram

Hallway COM1 - Surface wiring

PRESENCE DETECTOR

EAN **4007841057978**
E-Nr. **535937002**

Accessories

ORDERING INFORMATION

Art.-Nr.	4007841057978
EAN	4007841057978
E-Number	535937002
Typ	**Hallway COM1 - Surface wiring**

nevalux AG
Neugrütstrasse 2
8610 Uster
+41 44 508 78 78
info@nevalux.swiss