HF 3360 DALI-2 Input Device - surface, sq.

MOTION DETECTOR

EAN 4007841057312
E-Nr. 535940307

- UV-resistant plastic
- Large terminal compartment
- Optional corner wall mount bracket

steinel

52 x 95 x 95 mm



HF 3360 DALI-2 Input Device - surface, sq.

MOTION DETECTOR

EAN 4007841057312
E-Nr. 535940307

Technical Data

IDENTIFICATION

Version	Motion detectors

DIMENSIONS

Dimensions L × W × H	52 x 95 x 95 mm

ELECTRICAL

Mains connection	12 – 22,5 V
Own consumption	0,5 W
Supply voltage detail	DALI bus
Control output DALI	Addressable / slave

SENSOR TECHNOLOGY

Max. mounting height	4,00 m
Sensor technology	High frequency
Transmission power	< 1 mW
HF technology	5,8 GHz
With motion detector	Yes
Detection	also through glass, wood and stud walls
Detection angle	360 °
Opening angle	180 °
Sneak-under protection	Yes
Segment-by-segment masking	No
Electronic scalability	Yes
Mechanical scalability	No
Radial range	Ø 8 m (50 m²)
Tangential range	Ø 8 m (50 m²)
Mounting height	2,0 – 4,0 m
Optimal mounting height	2,8 m

CONNECTIVITY

Networking	Yes
Type of networking	Master/Slave
Number of DALI participants	5
With bus coupler	Yes
Networking via	DALI bus

LIGHTING TECHNOLOGY

Soft light start	No
Constant light regulation	No

SETTINGS

Twilight switch	Yes
Twilight setting	2 – 1000 lx
Base light function	No
Main light adjustable	No
Settings via	Bus
With remote control	No
Twilight setting teach	No

HOUSING & MATERIAL

Protection class (IP)	IP54
Ambient temperature	-20...+50 °C
Mounting location	ceiling, corner, wall
Application location	Indoors
Mounting type	Surface mounting
Material	Plastic
Application room	Indoors, WC / washroom, function room / ancillary room, multi-storey / underground car park, stairwell
Colour	White
RAL colour	9003

SCOPE OF DELIVERY & WARRANTY

Manufacturer warranty	5 years
Corner wall bracket included	No

CERTIFICATES & EPREL

Certificates	DALI-2

HF 3360 DALI-2 Input Device - surface, sq.

MOTION DETECTOR

EAN **4007841057312**
E-Nr. **535940307**

Illustrations

TECHNICAL DRAWINGS

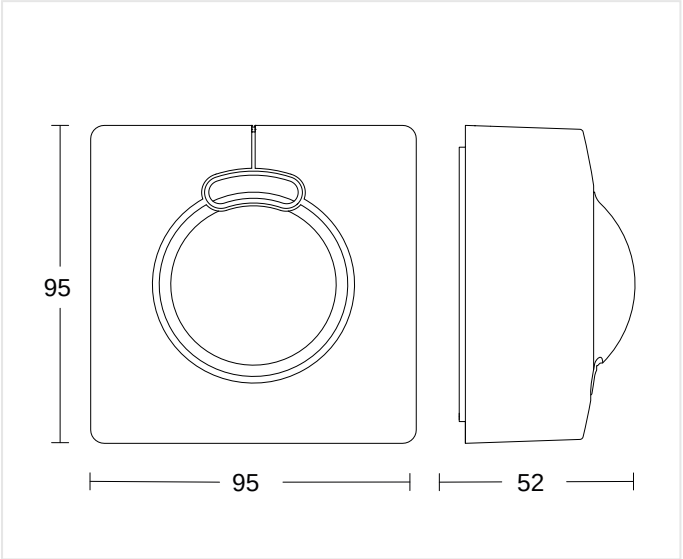

52 x 95 x 95 mm

MOUNTING HEIGHT

2,0 – 4,0 m	2,8 m	4,00 m
BEREICH	OPTIMAL	MAX

HF 3360 DALI-2 Input Device - surface, sq.

MOTION DETECTOR

EAN **4007841057312**
E-Nr. **535940307**

Wiring Diagrams

WIRING DIAGRAM 1

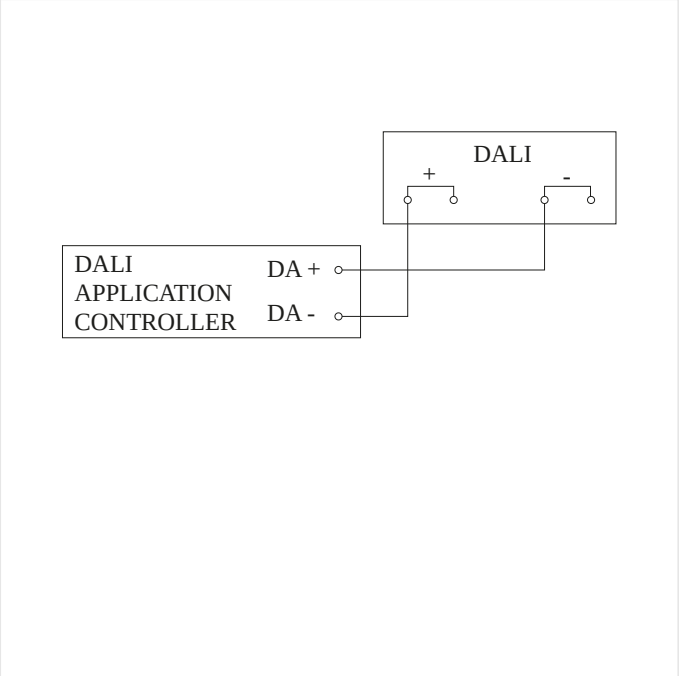

Circuit diagram

HF 3360 DALI-2 Input Device - surface, sq.

MOTION DETECTOR

EAN 4007841057312
E-Nr. 535940307

Accessories

	ARTICLE NUMBER	DESCRIPTION	CATEGORY
	4007841009151	**Smart Remote**	Accessory
	4007841035174	**Eckwandhalter 3000 weiss**	Accessory
	4007841056674	**Schwarze Blende für den HF 3360 Aufputz eckig**	Accessory
	4007841056698	**Schwarze Blende für den HF 3360 Aufputz rund**	Accessory

ORDERING INFORMATION

Art.-Nr.	4007841057312
EAN	4007841057312
E-Number	535940307
Typ	**HF 3360 DALI-2 Input Device - surface, sq.**

nevalux AG
Neugrütstrasse 2
8610 Uster
+41 44 508 78 78
info@nevalux.swiss