# HF 3360 DALI-2 Input Device - concealed, sq.

**MOTION DETECTOR**

EAN 4007841057336
E-Nr. 535940305

- UV-resistant plastic

steinel

64 x 94 x 94 mm



# HF 3360 DALI-2 Input Device - concealed, sq.

**MOTION DETECTOR**

EAN **4007841057336**
E-Nr. **535940305**

## Technical Data

### IDENTIFICATION

| | |
|---|---|
| Version | **Motion detectors** |

### DIMENSIONS

| | |
|---|---|
| Dimensions L × W × H | **64 x 94 x 94 mm** |

### ELECTRICAL

| | |
|---|---|
| Mains connection | **12 – 22,5 V** |
| Own consumption | **0,5 W** |
| Supply voltage detail | **DALI bus** |
| Control output DALI | **Addressable / slave** |

### SENSOR TECHNOLOGY

| | |
|---|---|
| Max. mounting height | **4,00 m** |
| Sensor technology | **High frequency** |
| Transmission power | **< 1 mW** |
| HF technology | **5,8 GHz** |
| With motion detector | **Yes** |
| Detection | **also through glass, wood and stud walls** |
| Detection angle | **360 °** |
| Opening angle | **180 °** |
| Sneak-under protection | **Yes** |
| Segment-by-segment masking | **No** |
| Electronic scalability | **Yes** |
| Mechanical scalability | **No** |
| Radial range | **Ø 8 m (50 m²)** |
| Tangential range | **Ø 8 m (50 m²)** |
| Mounting height | **2,0 – 4,0 m** |
| Optimal mounting height | **2,8 m** |

### CONNECTIVITY

| | |
|---|---|
| Networking | **Yes** |
| Type of networking | **Master/Slave** |
| Number of DALI participants | **5** |
| With bus coupler | **Yes** |
| Networking via | **DALI bus** |

### LIGHTING TECHNOLOGY

| | |
|---|---|
| Soft light start | **No** |
| Constant light regulation | **No** |

### SETTINGS

| | |
|---|---|
| Twilight switch | **Yes** |
| Twilight setting | **2 – 1000 lx** |
| Base light function | **No** |
| Main light adjustable | **No** |
| Settings via | **Bus** |
| With remote control | **No** |
| Twilight setting teach | **No** |

### HOUSING & MATERIAL

| | |
|---|---|
| Protection class (IP) | **IP20** |
| Ambient temperature | **-20...+50 °C** |
| Mounting location | **ceiling, corner, wall** |
| Application location | **Indoors** |
| Mounting type | **Concealed mounting** |
| Material | **Plastic** |
| Application room | **Indoors, WC / washroom, function room / ancillary room, multi-storey / underground car park, stairwell** |
| Colour | **White** |
| RAL colour | **9003** |

### SCOPE OF DELIVERY & WARRANTY

| | |
|---|---|
| Manufacturer warranty | **5 years** |
| Corner wall bracket included | **No** |

### CERTIFICATES & EPREL

| | |
|---|---|
| Certificates | **DALI-2** |

# HF 3360 DALI-2 Input Device - concealed, sq.

**MOTION DETECTOR**

EAN **4007841057336**
E-Nr. **535940305**

## Illustrations

### TECHNICAL DRAWINGS

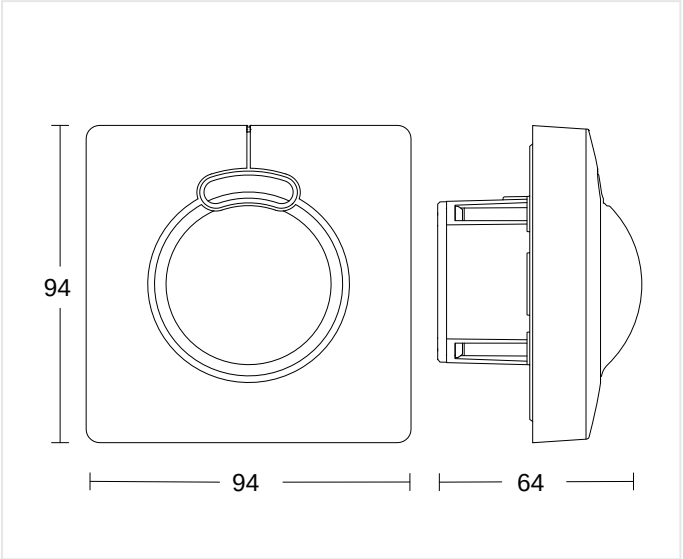


64 x 94 x 94 mm

### MOUNTING HEIGHT

| 2,0 – 4,0 m | 2,8 m | 4,00 m |
|---|---|---|
| BEREICH | OPTIMAL | MAX |

# HF 3360 DALI-2 Input Device - concealed, sq.

**MOTION DETECTOR**

EAN **4007841057336**
E-Nr. **535940305**

## Wiring Diagrams

### WIRING DIAGRAM 1

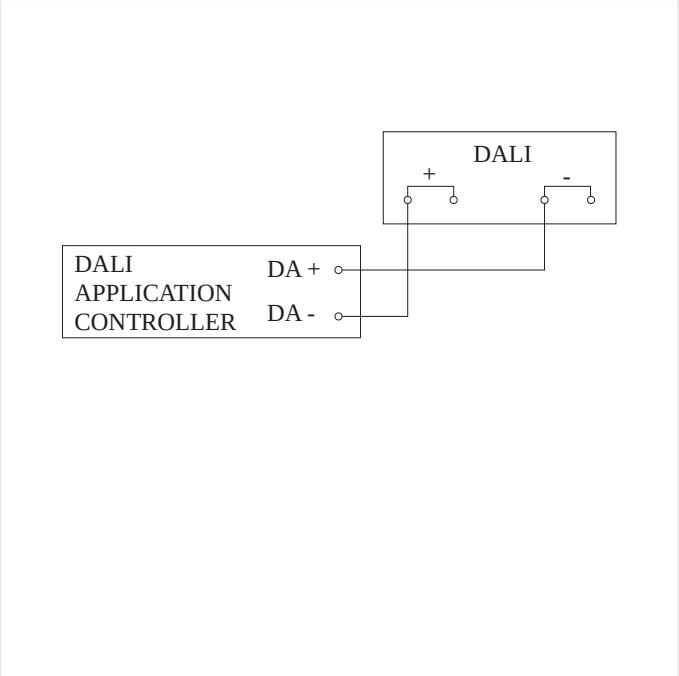


Circuit diagram

# HF 3360 DALI-2 Input Device - concealed, sq.

MOTION DETECTOR

EAN **4007841057336**
E-Nr. **535940305**

## Accessories

| | ARTICLE NUMBER | DESCRIPTION | CATEGORY |
|---|---|---|---|
|  | 4007841056681 | **Schwarze Blende für den HF 3360 Unterputz eckig** | Accessory |
|  | 4007841056704 | **Schwarze Blende für den HF 3360 Unterputz rund** | Accessory |
|  | 4007841009151 | **Smart Remote** | Accessory |
|  | 4007841035174 | **Eckwandhalter 3000 weiss** | Accessory |

### ORDERING INFORMATION

| | |
|---|---|
| Art.-Nr. | 4007841057336 |
| EAN | 4007841057336 |
| E-Number | 535940305 |
| Typ | **HF 3360 DALI-2 Input Device - concealed, sq.** |

nevalux AG
Neugrütstrasse 2
8610 Uster
+41 44 508 78 78
info@nevalux.swiss