HF 3360 DALI-2 Input Device - concealed, rd.

MOTION DETECTOR

EAN 4007841057343
E-Nr. 535940505

- UV-resistant plastic

steinel

124 x 95 mm



HF 3360 DALI-2 Input Device - concealed, rd.

MOTION DETECTOR

EAN **4007841057343**
E-Nr. **535940505**

Technical Data

IDENTIFICATION

Version	**Motion detectors**

DIMENSIONS

Dimensions Ø × H	**124 x 95 mm**

ELECTRICAL

Mains connection	**12 – 22,5 V**
Own consumption	**0,5 W**
Supply voltage detail	**DALI bus**
Control output DALI	**Addressable / slave**

SENSOR TECHNOLOGY

Max. mounting height	**4,00 m**
Sensor technology	**High frequency**
Transmission power	**< 1 mW**
HF technology	**5,8 GHz**
With motion detector	**Yes**
Detection	**also through glass, wood and stud walls**
Detection angle	**360 °**
Opening angle	**180 °**
Sneak-under protection	**Yes**
Segment-by-segment masking	**No**
Electronic scalability	**Yes**
Mechanical scalability	**No**
Radial range	**Ø 8 m (50 m²)**
Tangential range	**Ø 8 m (50 m²)**
Mounting height	**2,0 – 4,0 m**
Optimal mounting height	**2,8 m**

CONNECTIVITY

Networking	**Yes**
Type of networking	**Master/Slave**
Number of DALI participants	**5**
With bus coupler	**Yes**
Networking via	**DALI bus**

LIGHTING TECHNOLOGY

Soft light start	**No**
Constant light regulation	**No**

SETTINGS

Twilight switch	**Yes**
Twilight setting	**2 – 1000 lx**
Base light function	**No**
Main light adjustable	**No**
Settings via	**Bus**
With remote control	**No**
Twilight setting teach	**No**

HOUSING & MATERIAL

Protection class (IP)	**IP20**
Ambient temperature	**-20...+50 °C**
Mounting location	**ceiling, corner, wall**
Application location	**Indoors**
Mounting type	**Concealed mounting**
Material	**Plastic**
Application room	**Indoors, WC / washroom, function room / ancillary room, multi-storey / underground car park, stairwell**
Colour	**White**
RAL colour	**9003**

SCOPE OF DELIVERY & WARRANTY

Manufacturer warranty	**5 years**
Corner wall bracket included	**No**

CERTIFICATES & EPREL

Certificates	**DALI-2**

HF 3360 DALI-2 Input Device - concealed, rd.

MOTION DETECTOR

EAN **4007841057343**
E-Nr. **535940505**

Illustrations

TECHNICAL DRAWINGS

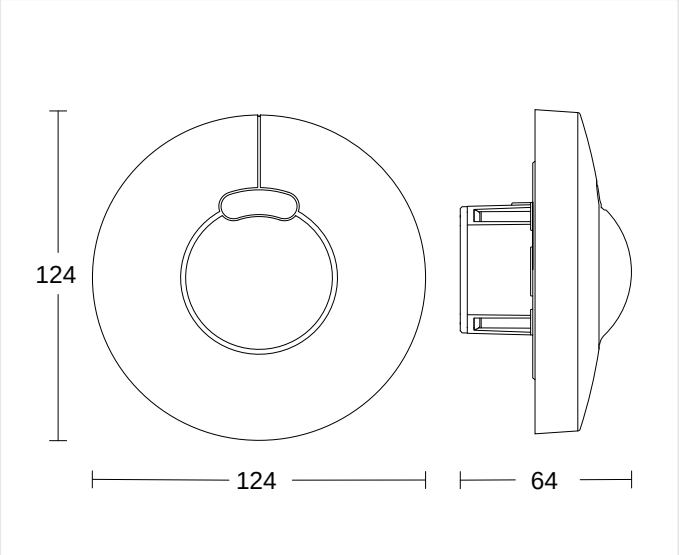

124 x 95 mm

MOUNTING HEIGHT

2,0 – 4,0 m	2,8 m	4,00 m
BEREICH	OPTIMAL	MAX

HF 3360 DALI-2 Input Device - concealed, rd.

MOTION DETECTOR

EAN 4007841057343
E-Nr. 535940505

Wiring Diagrams

WIRING DIAGRAM 1

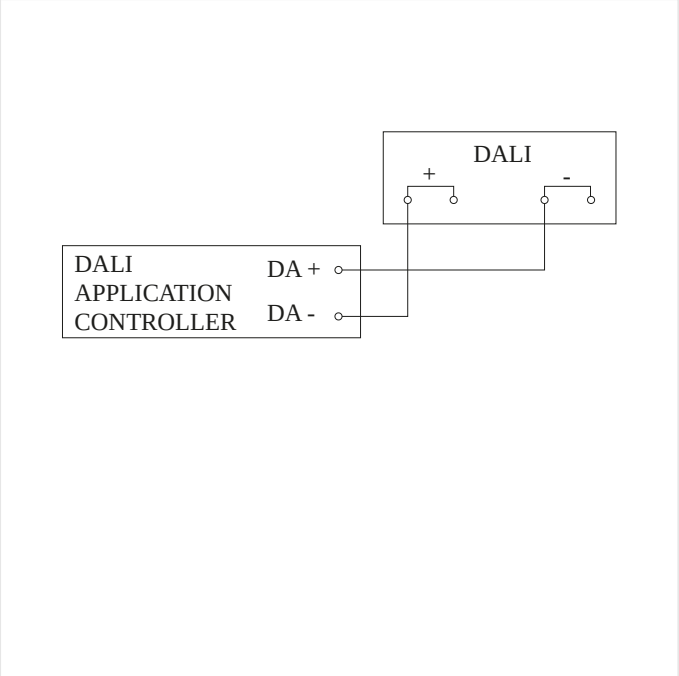

Circuit diagram

HF 3360 DALI-2 Input Device - concealed, rd.

MOTION DETECTOR

EAN 4007841057343
E-Nr. 535940505

Accessories

	ARTICLE NUMBER	DESCRIPTION	CATEGORY
	4007841009151	**Smart Remote**	Accessory
	4007841056704	**Schwarze Blende für den HF 3360 Unterputz rund**	Accessory
	4007841056681	**Schwarze Blende für den HF 3360 Unterputz eckig**	Accessory

ORDERING INFORMATION

Art.-Nr.	4007841057343
EAN	4007841057343
E-Number	535940505
Typ	**HF 3360 DALI-2 Input Device - concealed, rd.**

neva lux

nevalux AG
Neugrütstrasse 2
8610 Uster
+41 44 508 78 78
info@nevalux.swiss