Dual US DALI-2 Input Device - concealed

PRESENCE DETECTOR

EAN 4007841057466
E-Nr. 535933400

- Optional surface-mounting adapter
- Optional guard cage

steinel

71 x 120 x 120 mm



Dual US DALI-2 Input Device - concealed

PRESENCE DETECTOR

EAN 4007841057466
E-Nr. 535933400

Technical Data

IDENTIFICATION

Version	Presence detector

DIMENSIONS

Dimensions L × W × H	71 x 120 x 120 mm

ELECTRICAL

Mains connection	12 – 22,5 V
Supply voltage detail	DALI bus
Control output DALI	Addressable / slave

SENSOR TECHNOLOGY

Max. mounting height	3,50 m
Sensor technology	Ultrasonic
With motion detector	Yes
Detection angle	360 °, Corridor
Opening angle	180 °
Sneak-under protection	Yes
Segment-by-segment masking	No
Electronic scalability	Yes
Mechanical scalability	No
Radial range	20 x 3 m (60 m²)
Tangential range	20 x 3 m (60 m²)
Mounting height	2,5 – 3,5 m
US technology	40 kHz
Optimal mounting height	2,8 m

CONNECTIVITY

Networking	Yes
Type of networking	Master/Slave
Number of DALI participants	12
With bus coupler	Yes
Networking via	DALI bus

LIGHTING TECHNOLOGY

Soft light start	No
Constant light regulation	No

SETTINGS

Twilight switch	Yes
Twilight setting	10 – 1000 lx
Base light function	No
Main light adjustable	No
Settings via	Bus
With remote control	No
Twilight setting teach	No

HOUSING & MATERIAL

Protection class (IP)	IP20
Ambient temperature	-25...+55 °C
Mounting location	ceiling
Application location	Indoors
Mounting type	Concealed mounting
Material	Plastic
Application room	Indoors, corridor / aisle
Colour	White
RAL colour	9010

SCOPE OF DELIVERY & WARRANTY

Manufacturer warranty	5 years
Corner wall bracket included	No

CERTIFICATES & EPREL

Certificates	DALI-2

Dual US DALI-2 Input Device - concealed

PRESENCE DETECTOR

EAN **4007841057466**
E-Nr. **535933400**

Illustrations

TECHNICAL DRAWINGS

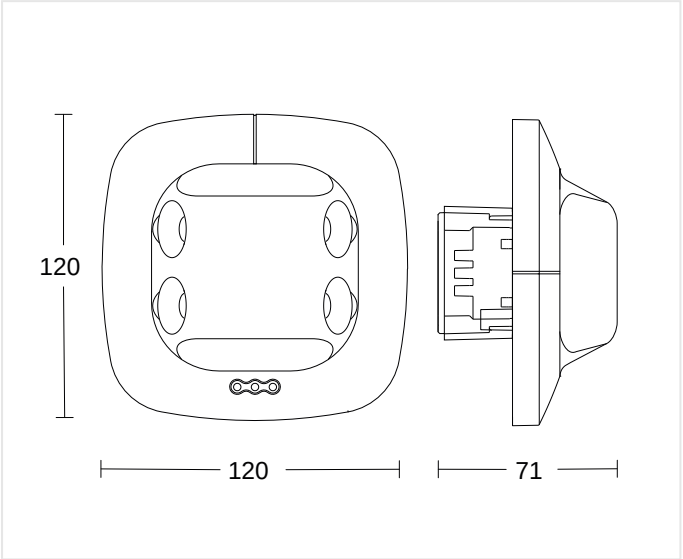

71 x 120 x 120 mm

MOUNTING HEIGHT

2,5 – 3,5 m	2,8 m	3,50 m
BEREICH	OPTIMAL	MAX

Dual US DALI-2 Input Device - concealed

PRESENCE DETECTOR

EAN 4007841057466
E-Nr. 535933400

Wiring Diagrams

WIRING DIAGRAM 1

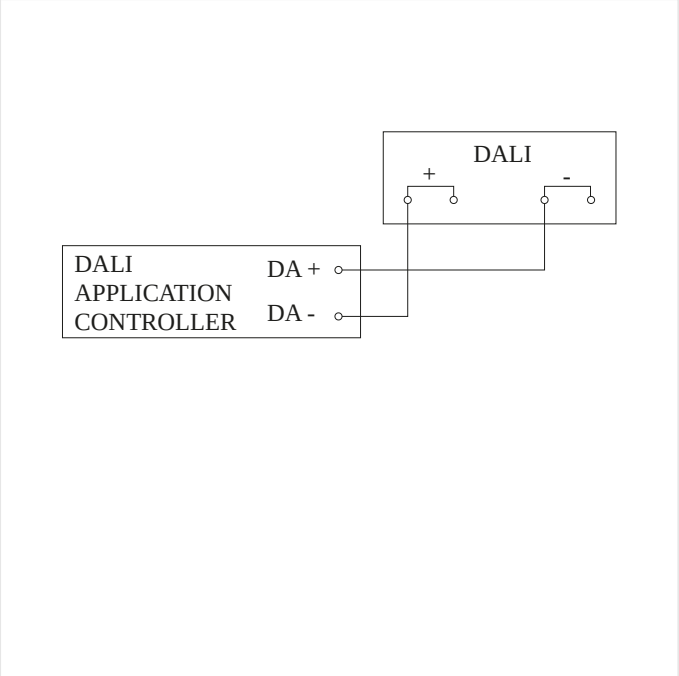

Circuit diagram

Dual US DALI-2 Input Device - concealed

PRESENCE DETECTOR

EAN **4007841057466**
E-Nr. **535933400**

Accessories

	ARTICLE NUMBER	DESCRIPTION	CATEGORY
	4007841009151	**Smart Remote**	Accessory

ORDERING INFORMATION

Art.-Nr.	4007841057466
EAN	4007841057466
E-Number	535933400
Typ	**Dual US DALI-2 Input Device - concealed**

nevalux AG
Neugrütstrasse 2
8610 Uster
+41 44 508 78 78
info@nevalux.swiss