US 360 DALI-2 Input Device

PRESENCE DETECTOR

EAN 4007841057534
E-Nr. 535933300

- Optional surface-mounting adapter
- Optional guard cage

steinel

67 x 120 x 120 mm



US 360 DALI-2 Input Device

PRESENCE DETECTOR

EAN **4007841057534**
E-Nr. **535933300**

Technical Data

IDENTIFICATION

Version	**Presence detector**

DIMENSIONS

Dimensions L × W × H	**67 x 120 x 120 mm**

ELECTRICAL

Mains connection	**12 – 22,5 V**
Supply voltage detail	**DALI bus**
Control output DALI	**Addressable / slave**

SENSOR TECHNOLOGY

Max. mounting height	**3,50 m**
Sensor technology	**Ultrasonic**
With motion detector	**Yes**
Detection angle	**360 °**
Opening angle	**180 °**
Sneak-under protection	**Yes**
Segment-by-segment masking	**No**
Electronic scalability	**Yes**
Mechanical scalability	**No**
Radial range	**Ø 10 m (79 m²)**
Tangential range	**Ø 6 m (28 m²)**
Mounting height	**2,5 – 3,5 m**
Presence range	**Ø 6 m (28 m²)**
US technology	**40 kHz**
Optimal mounting height	**2,5 m**

CONNECTIVITY

Networking	**Yes**
Type of networking	**Master/Slave**
Number of DALI participants	**12**
With bus coupler	**Yes**
Networking via	**DALI bus**

LIGHTING TECHNOLOGY

Soft light start	**No**
Constant light regulation	**No**

SETTINGS

Twilight switch	**Yes**
Twilight setting	**10 – 1000 lx**
Base light function	**No**
Main light adjustable	**No**
Settings via	**Bus**
With remote control	**No**
Twilight setting teach	**No**

HOUSING & MATERIAL

Protection class (IP)	**IP20**
Ambient temperature	**-25...+55 °C**
Mounting location	**ceiling**
Application location	**Indoors**
Mounting type	**Concealed mounting**
Material	**Plastic**
Application room	**Indoors, WC / washroom, classroom, conference room / meeting room, duty room, function room / ancillary room, one-person office, open-plan office, recreation room, stairwell**
Colour	**White**
RAL colour	**9010**

SCOPE OF DELIVERY & WARRANTY

Manufacturer warranty	**5 years**
Corner wall bracket included	**No**

CERTIFICATES & EPREL

Certificates	**DALI-2**

US 360 DALI-2 Input Device

PRESENCE DETECTOR

EAN **4007841057534**
E-Nr. **535933300**

Illustrations

TECHNICAL DRAWINGS

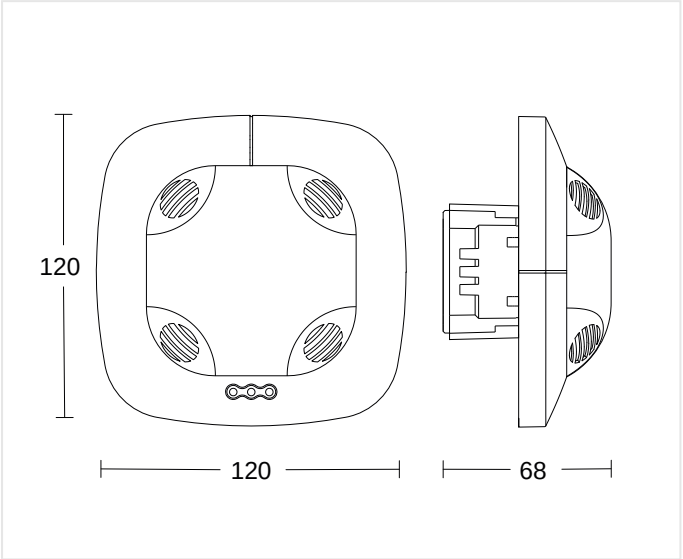

67 x 120 x 120 mm

MOUNTING HEIGHT

2,5 – 3,5 m	2,5 m	3,50 m
BEREICH	OPTIMAL	MAX

US 360 DALI-2 Input Device

PRESENCE DETECTOR

EAN 4007841057534
E-Nr. 535933300

Wiring Diagrams

WIRING DIAGRAM 1

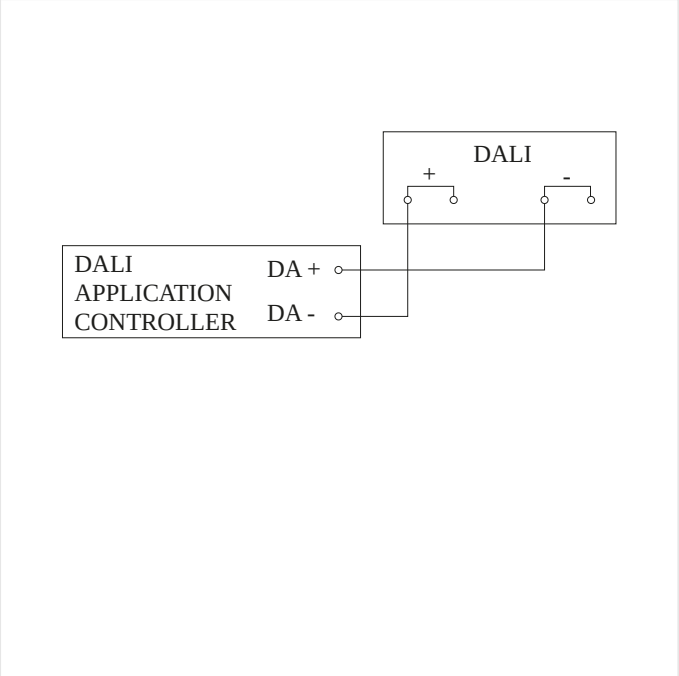

Circuit diagram

US 360 DALI-2 Input Device

PRESENCE DETECTOR

EAN **4007841057534**
E-Nr. **535933300**

Accessories

	ARTICLE NUMBER	DESCRIPTION	CATEGORY
	4007841003036	**Control PRO Schutzkorb**	Accessory
	4007841009151	**Smart Remote**	Accessory
	4007841000363	**Aufputz-Adapter Control Pro IP54 weiss**	Accessory

ORDERING INFORMATION

Art.-Nr.	4007841057534
EAN	4007841057534
E-Number	535933300
Typ	**US 360 DALI-2 Input Device**

neva lux

nevalux AG
Neugrütstrasse 2
8610 Uster
+41 44 508 78 78
info@nevalux.swiss