IR Micro DALI-2 Input Device

PRESENCE DETECTOR

EAN 4007841057732
E-Nr. 535932200

- Small. Round. Slim. Compact, inconspicuous single workstation solution. IR Micro 360° passive infrared sensor with a presence detection zone of 4 x 4 m (presence and radial) or 6 x 6 m (tangential). DALI-2 Input Device enables sensors to communicate collected sensor data to higher-level lighting management systems (e.g. LiveLink).

steinel

80 x 21 mm



IR Micro DALI-2 Input Device

PRESENCE DETECTOR

EAN **4007841057732**
E-Nr. **535932200**

Technical Data

IDENTIFICATION

Version	**Presence detector**

DIMENSIONS

Dimensions Ø × H	**80 x 21 mm**

ELECTRICAL

Mains connection	**12 – 22,5 V**
Supply voltage detail	**DALI bus**
Switching output 1 potential-free	**No**
Control output DALI	**Addressable / slave**

SENSOR TECHNOLOGY

Max. mounting height	**5,00 m**
Sensor technology	**passive infrared**
With motion detector	**Yes**
Detection angle	**360 °**
Opening angle	**160 °**
Sneak-under protection	**Yes**
Segment-by-segment masking	**No**
Electronic scalability	**No**
Mechanical scalability	**No**
Radial range	**4 x 4 m (16 m²)**
Tangential range	**6 x 6 m (36 m²)**
Switching zones	**168 switching zones**
Mounting height	**2,0 – 5,0 m**
Presence range	**4 x 4 m (16 m²)**
Optimal mounting height	**2,8 m**

CONNECTIVITY

Networking	**Yes**
Type of networking	**Master/Slave**
Number of DALI participants	**2**
With bus coupler	**Yes**
Networking via	**DALI bus**

LIGHTING TECHNOLOGY

Soft light start	**No**
Constant light regulation	**No**

SETTINGS

Twilight switch	**Yes**
Twilight setting	**2 – 1000 lx**
Base light function	**No**
Main light adjustable	**No**
Settings via	**Bus**
With remote control	**No**
Twilight setting teach	**No**

HOUSING & MATERIAL

Protection class (IP)	**IP20**
Ambient temperature	**0...+40 °C**
Mounting location	**ceiling**
Application location	**Indoors**
Mounting type	**Concealed mounting**
Material	**Plastic**
Application room	**Indoors, WC / washroom, care room, function room / ancillary room, hotel room, one-person office**
Colour	**White**
RAL colour	**9003**

SCOPE OF DELIVERY & WARRANTY

Manufacturer warranty	**5 years**
Corner wall bracket included	**No**

CERTIFICATES & EPREL

Certificates	**DALI-2**

IR Micro DALI-2 Input Device

PRESENCE DETECTOR

EAN **4007841057732**
E-Nr. **535932200**

Illustrations

TECHNICAL DRAWINGS

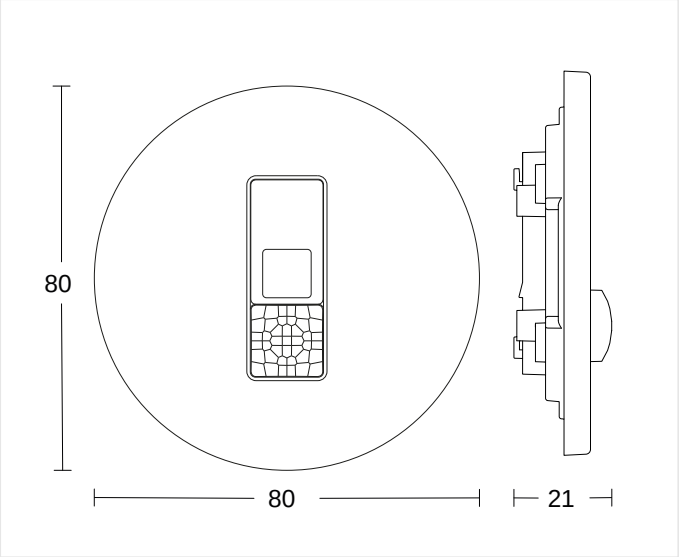

80 x 21 mm

MOUNTING HEIGHT

2,0 – 5,0 m	2,8 m	5,00 m
BEREICH	OPTIMAL	MAX

IR Micro DALI-2 Input Device

PRESENCE DETECTOR

EAN 4007841057732
E-Nr. 535932200

Wiring Diagrams

WIRING DIAGRAM 1

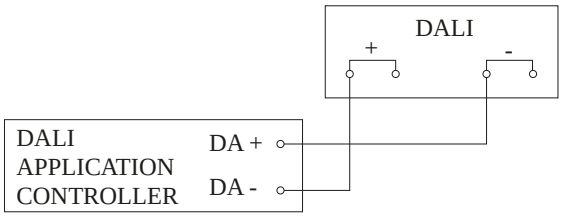

Circuit diagram

IR Micro DALI-2 Input Device

PRESENCE DETECTOR

EAN **4007841057732**
E-Nr. **535932200**

Accessories

ORDERING INFORMATION

Art.-Nr.	4007841057732
EAN	4007841057732
E-Number	535932200
Typ	**IR Micro DALI-2 Input Device**

neva
lux

nevalux AG
Neugrütstrasse 2
8610 Uster
+41 44 508 78 78
info@nevalux.swiss