Single US KNX

PRESENCE DETECTOR

EAN 4007841059507
E-Nr. 535933320

- Optional remote controls
- Smart Remote remote control optional
- Optional surface-mounting adapter
- Optional guard cage

steinel

70 x 120 x 120 mm



Single US KNX

PRESENCE DETECTOR

EAN **4007841059507**
E-Nr. **535933320**

Technical Data

IDENTIFICATION

Version	**Presence detector**

DIMENSIONS

Dimensions L × W × H	**70 x 120 x 120 mm**

ELECTRICAL

Mains connection	**21 – 30 V**
Supply voltage detail	**KNX bus**

SENSOR TECHNOLOGY

Max. mounting height	**3,50 m**
Sensor technology	**Ultrasonic**
With motion detector	**Yes**
Detection angle	**180 °**
Opening angle	**180 °**
Sneak-under protection	**Yes**
Segment-by-segment masking	**No**
Electronic scalability	**Yes**
Mechanical scalability	**No**
Radial range	**10 x 3 m (30 m²)**
Tangential range	**10 x 3 m (30 m²)**
Mounting height	**2,5 – 3,5 m**
US technology	**40 kHz**
Optimal mounting height	**2,8 m**

CONNECTIVITY

Networking	**Yes**
Type of networking	**Master/Slave, Master/Master**
KNX functions	**Photo-cell controller\nBasic light level function\nLight level\nHVAC output\nConstant-lighting control\nLight output 4x\nPresence output\nDay / night function\nLogic gate**
With bus coupler	**Yes**
Networking via	**KNX bus**

LIGHTING TECHNOLOGY

Soft light start	**Yes**
Continuous light	**selectable**
Constant light regulation	**Yes**

SETTINGS

Twilight switch	**Yes**
Twilight setting	**10 – 1000 lx**
Time setting	**10 s – 1092 min**
Base light function	**Yes**
Base light function time	**1-30 min, all day**
Main light adjustable	**0 - 100 %**
Settings via	**ETS software, Remote control, Smart Remote**
With remote control	**No**
Twilight setting teach	**Yes**

HOUSING & MATERIAL

Protection class (IP)	**IP20**
Ambient temperature	**-25...+55 °C**
Mounting location	**ceiling**
Application location	**Indoors**
Mounting type	**Concealed mounting**
Material	**Plastic**
Application room	**Indoors, corridor / aisle, stairwell**
Colour	**White**
RAL colour	**9010**

SCOPE OF DELIVERY & WARRANTY

Manufacturer warranty	**5 years**
Corner wall bracket included	**No**

Single US KNX

PRESENCE DETECTOR

EAN **4007841059507**
E-Nr. **535933320**

Illustrations

TECHNICAL DRAWINGS

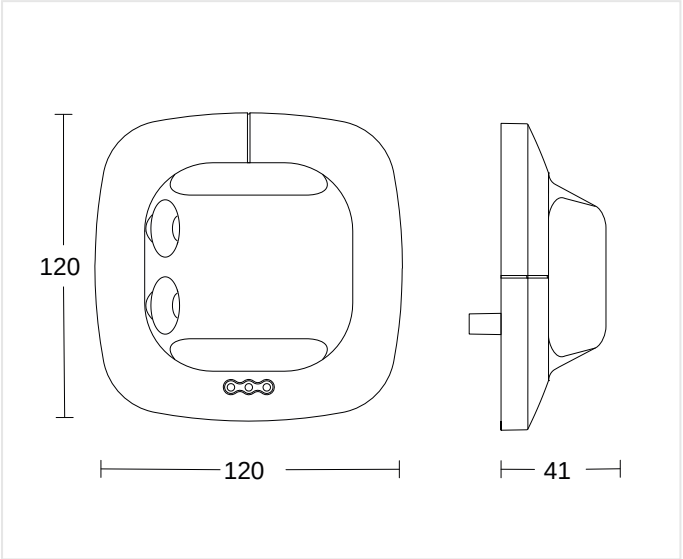

70 x 120 x 120 mm

MOUNTING HEIGHT

2,5 – 3,5 m	2,8 m	3,50 m
BEREICH	OPTIMAL	MAX

Single US KNX

PRESENCE DETECTOR

EAN **4007841059507**
E-Nr. **535933320**

Accessories

ORDERING INFORMATION

Art.-Nr.	4007841059507
EAN	4007841059507
E-Number	535933320
Typ	**Single US KNX**

nevalux AG
Neugrütstrasse 2
8610 Uster
+41 44 508 78 78
info@nevalux.swiss