L 810 S Silver

SENSOR-SWITCHED LED OUTDOOR LIGHT

EAN 4007841671310
E-Nr. 941302809

- Including STEINEL LED system
- Concealed iHF sensor
- Intelligent soft light start
- Optional basic lighting level 10 %
- High-quality aluminium
- 4-hour manual override (optional)

steinel

146 x 230 x 88 mm

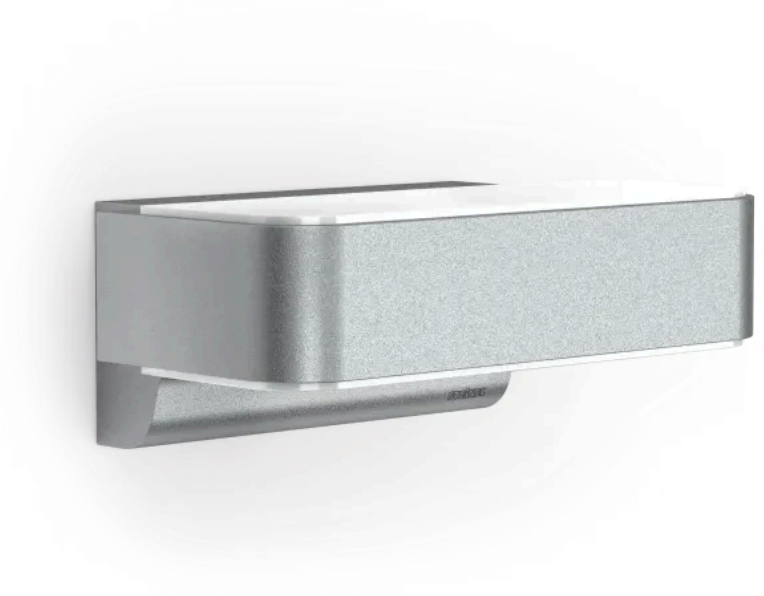

L 810 S Silver

SENSOR-SWITCHED LED OUTDOOR LIGHT

EAN **4007841671310**
E-Nr. **941302809**

Technical Data

DIMENSIONS

Dimensions L × W × H	**146 x 230 x 88 mm**

ELECTRICAL

Mains connection	**230 V / 50 – 60 Hz**
Power	**9,8 W**

SENSOR TECHNOLOGY

Max. mounting height	**2,50 m**
Sensor technology	**iHF (intelligent high-frequency technology)**
Transmission power	**< 1 mW**
With motion detector	**Yes**
Sneak-under protection	**No**
Segment-by-segment masking	**No**
Electronic scalability	**Yes**
Mechanical scalability	**No**
Radial range	**r = 5 m (35 m²)**
Tangential range	**r = 5 m (35 m²)**
Mounting height	**1,8 – 2,5 m**
Optimal mounting height	**2,0 m**

CONNECTIVITY

Networking	**No**
Slave mode adjustable	**Yes**

LIGHTING TECHNOLOGY

Measured luminous flux 360°	**679 lm**
Colour temperature	**3000 K**
With illuminant	**Yes, LED lamp**
Illuminant	**LED cannot be replaced**
Base	**without**
LED cooling system	**Active & Passive Thermo Control**
Soft light start	**Yes**
Continuous light	**selectable, 4h**

LIFETIME

LED lifetime L70B50 25°C	**> 60000 h**

SETTINGS

Twilight switch	**Yes**
Twilight setting	**2 – 2000 lx**
Time setting	**5 s – 15 min**
Base light function	**Yes**
Base light function time	**10/30 Min., ganze Nacht**
Functions	**Motions sensor**
Settings via	**Potentiometers**
With remote control	**No**
Base light function in percent	**10 %**
Base light function percent from	**10 %**

HOUSING & MATERIAL

Impact resistance	**IK03**
Protection class (IP)	**IP44**
Protection class	**II**
Ambient temperature	**-20...+40 °C**
Housing material	**Aluminium**
Cover material	**Opal plastic**
Mounting location	**Wall**
Application location	**Outdoors**
Mounting type	**Surface mounting**
Application room	**all round the building, courtyard & driveway, front door, garden, terrace / balcony**
Colour	**Silver**

SCOPE OF DELIVERY & WARRANTY

Manufacturer warranty	**3 years**
House number sheet included	**No**

CERTIFICATES & EPREL

EPREL category	**Surrounded product with integrated light source**

L 810 S Silver

SENSOR-SWITCHED LED OUTDOOR LIGHT

EAN **4007841671310**
E-Nr. **941302809**

Illustrations

TECHNICAL DRAWINGS

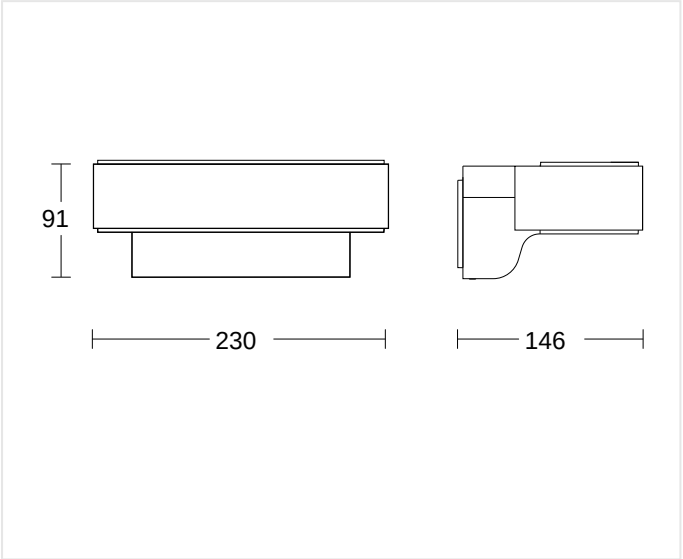

146 x 230 x 88 mm

MOUNTING HEIGHT

1,8 – 2,5 m	2,0 m	2,50 m
BEREICH	OPTIMAL	MAX

L 810 S Silver

SENSOR-SWITCHED LED OUTDOOR LIGHT

EAN **4007841671310**
E-Nr. **941302809**

Wiring Diagrams

WIRING DIAGRAM 1

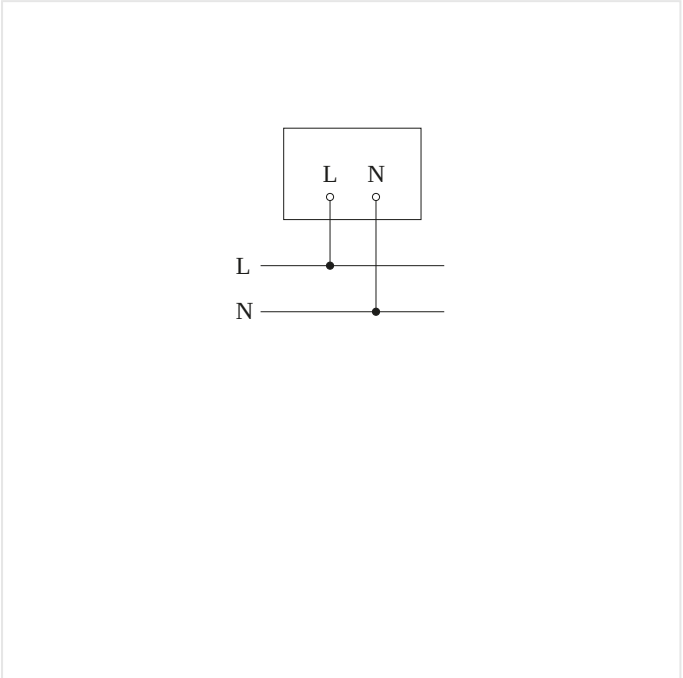

Circuit diagram

L 810 S Silver

SENSOR-SWITCHED LED OUTDOOR LIGHT

EAN **4007841671310**
E-Nr. **941302809**

Accessories

ORDERING INFORMATION

Art.-Nr.	4007841671310
EAN	4007841671310
E-Number	941302809
Typ	**L 810 S Silver**

nevalux AG
Neugrütstrasse 2
8610 Uster
+41 44 508 78 78
info@nevalux.swiss