L 620 CAM SC Anthracite

SENSOR-SWITCHED LED OUTDOOR LIGHT

EAN 4007841065829
E-Nr. 941200649

- High-quality aluminium
- Micro SD card (16 GB included)
- Integrated intercom unit
- Communication via smartphone
- High-precision sensor
- 1080p Full HD wide-angle colour camera, 180° swiveling
- Optional basic lighting level 0 - 40%
- Adjustable main light brightness (30 - 100%)

steinel

131 x 78 x 305 mm



L 620 CAM SC Anthracite

SENSOR-SWITCHED LED OUTDOOR LIGHT

EAN **4007841065829**
E-Nr. **941200649**

Technical Data

DIMENSIONS

Dimensions L × W × H	**131 x 78 x 305 mm**

ELECTRICAL

Mains connection	**230 V / 50 – 60 Hz**
Power	**14 W**

SENSOR TECHNOLOGY

Max. mounting height	**2,00 m**
Sensor technology	**passive infrared**
With motion detector	**Yes**
Opening angle	**45 °**
Sneak-under protection	**No**
Segment-by-segment masking	**No**
Electronic scalability	**Yes**
Mechanical scalability	**No**
Radial range	**r = 2 m (6 m²)**
Tangential range	**r = 10 m (157 m²)**
Mounting height	**1,8 – 2,0 m**
Optimal mounting height	**2,0 m**

CONNECTIVITY

Networking via	**Wi-Fi**

LIGHTING TECHNOLOGY

Measured luminous flux 360°	**925 lm**
Efficiency	**67 lm/W**
Colour temperature	**3000 K**
Colour rendering index	**80 - 89**
With illuminant	**Yes, STEINEL LED system**
Illuminant	**LED cannot be replaced**
Base	**without**
LED cooling system	**Passive Thermo Control**
Soft light start	**No**
Continuous light	**schaltbar**

LIFETIME

LED lifetime L70B50 25°C	**> 36000 h**
Average rated power supply lifetime at 25 °C	**> 36000 h**

SETTINGS

Twilight switch	**Yes**
Twilight setting	**10 – 10000 lx**
Time setting	**60 s – 15 min**
Base light function	**Yes**
Main light adjustable	**30 - 100 %**
Functions	**BewegungssensorGegensprechanlageKamera**
Settings via	**WLAN**
With remote control	**No**
Twilight setting teach	**No**
Base light function in percent	**0 – 40 %**
Base light function percent from	**0 %**

HOUSING & MATERIAL

Impact resistance	**IK03**
Protection class (IP)	**IP44**
Protection class	**I**
Ambient temperature	**-10...+40 °C**
Housing material	**Aluminium**
Cover material	**Opal glass**
Mounting location	**Wall**
Application location	**Outdoors**
Mounting type	**Surface mounting**
Material	**Aluminium**
Application room	**Aufenthaltsraum, Hauseingang, Hof & Einfahrt**
Colour	**Anthracite**

SCOPE OF DELIVERY & WARRANTY

Manufacturer warranty	**3 years**
House number sheet included	**No**

CERTIFICATES & EPREL

EPREL category	**Surrounded product with integrated light source**

L 620 CAM SC Anthracite

SENSOR-SWITCHED LED OUTDOOR LIGHT

EAN **4007841065829**
E-Nr. **941200649**

Illustrations

TECHNICAL DRAWINGS

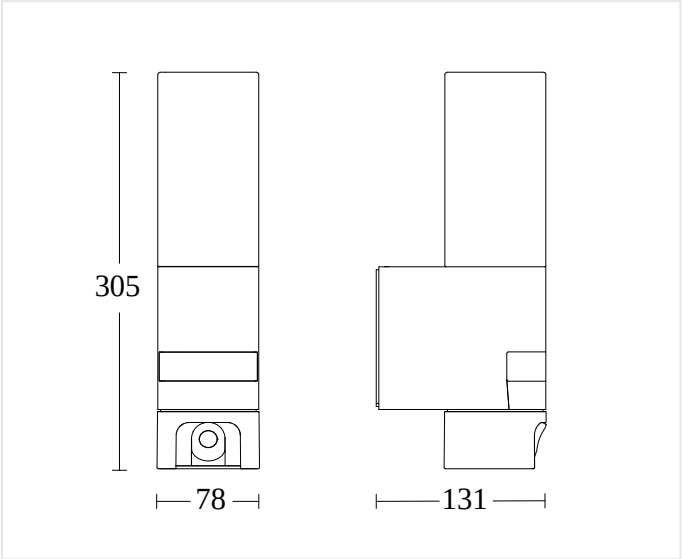

131 x 78 x 305 mm

MOUNTING HEIGHT

1,8 – 2,0 m	2,0 m	2,00 m
BEREICH	OPTIMAL	MAX

L 620 CAM SC Anthracite

SENSOR-SWITCHED LED OUTDOOR LIGHT

EAN **4007841065829**
E-Nr. **941200649**

Wiring Diagrams

WIRING DIAGRAM 1

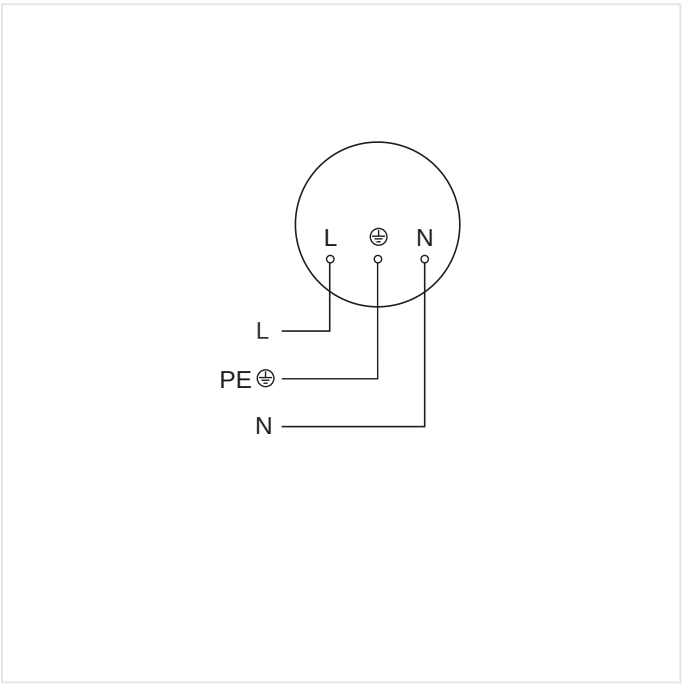

Master circuit diagram

WIRING DIAGRAM 2

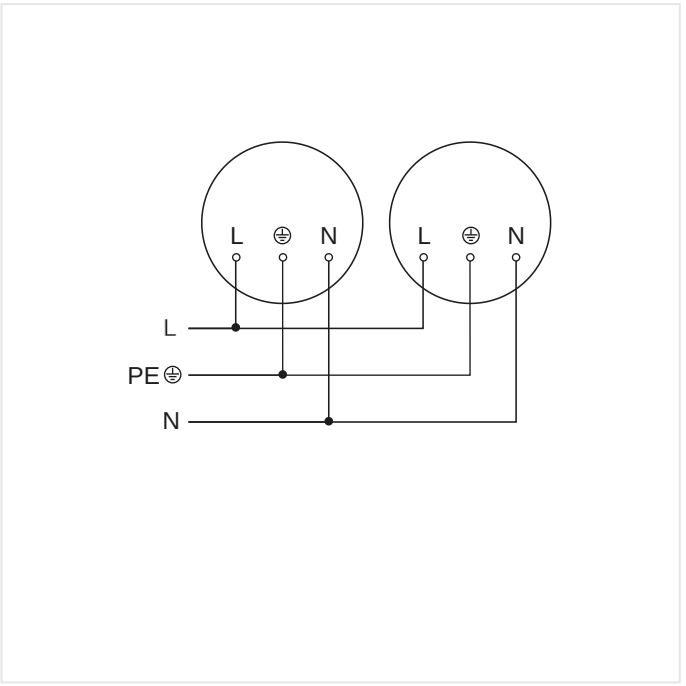

Master/slave interconnection circuit diagram

L 620 CAM SC Anthracite

SENSOR-SWITCHED LED OUTDOOR LIGHT

EAN **4007841065829**
E-Nr. **941200649**

Accessories

ORDERING INFORMATION

Art.-Nr.	4007841065829
EAN	4007841065829
E-Number	941200649
Typ	**L 620 CAM SC Anthracite**

nevalux AG
Neugrütstrasse 2
8610 Uster
+41 44 508 78 78
info@nevalux.swiss