IR Quattro SLIM XS KNX - round

PRESENCE DETECTOR

EAN 4007841058517
E-Nr. 535935708

- Extremely slim overall height
- High-quality retina lens
- Can only be set using optional remote controls
- Smart Remote remote control optional

steinel

94 x 49 mm



IR Quattro SLIM XS KNX - round

PRESENCE DETECTOR

EAN **4007841058517**
E-Nr. **535935708**

Technical Data

IDENTIFICATION

Variant	**KNX - round**
Version	**Presence detector**

DIMENSIONS

Dimensions Ø × H	**94 x 49 mm**

ELECTRICAL

Mains connection	**21 – 30 V**
FIL_2_PRO interfaces	**KNX**

SENSOR TECHNOLOGY

Sensor technology	**passive infrared**
Detection angle	**360 °**
Opening angle	**71 °**
Sneak-under protection	**Yes**
Segment-by-segment masking	**No**
Electronic scalability	**No**
Mechanical scalability	**No**
Range detail	**Retina lens and hexagonal Fresnel structure**
Radial range	**4 x 4 m (16 m²)**
Tangential range	**4 x 4 m (16 m²)**
Switching zones	**408 switching zones**
Mounting height	**2,5 – 4,0 m**
Presence range	**4 x 4 m (16 m²)**
Optimal mounting height	**2,8 m**
FIL_4_PRO sensor technology	**Passive infrared**

CONNECTIVITY

Networking	**Yes**
Type of networking	**Master/Slave, Master/Master**
KNX functions	**Photo-cell controller, Basic light level function, Light level, HVAC output, Constant-lighting control, Light output 4x, Presence output, Day / night function, Logic gate**
With bus coupler	**Yes**

LIGHTING TECHNOLOGY

Constant light regulation	**Yes**

SETTINGS

Twilight setting	**10 – 1000 lx**
Time setting	**0 s – 1092 min**
Base light function	**Yes**
Base light function time	**1-255 min**
Settings via	**ETS software, Remote control, Smart Remote**
With remote control	**Yes**
Twilight setting teach	**Yes**

HOUSING & MATERIAL

Protection class (IP)	**IP20**
Ambient temperature	**0...+40 °C**
Mounting location	**ceiling**
Application location	**Indoors**
Mounting type	**Concealed mounting**
Material	**Plastic**
Colour	**White**
RAL colour	**9010**

SCOPE OF DELIVERY & WARRANTY

Manufacturer warranty	**5 years**

OTHER

Application, location, room	**one-person office, hotel room, care room, function room / ancillary room, WC / washroom, Indoors**

IR Quattro SLIM XS KNX - round

PRESENCE DETECTOR

EAN **4007841058517**
E-Nr. **535935708**

Illustrations

TECHNICAL DRAWINGS

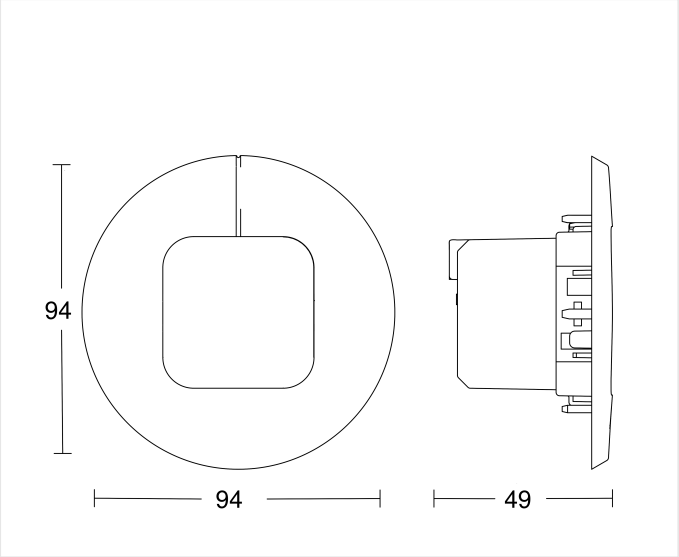

94 x 49 mm

MOUNTING HEIGHT

2,5 – 4,0 m BEREICH	2,8 m OPTIMAL

IR Quattro SLIM XS KNX - round

PRESENCE DETECTOR

EAN **4007841058517**
E-Nr. **535935708**

Accessories

	ARTICLE NUMBER	DESCRIPTION	CATEGORY
	4007841592912	**Nutzer Fernbedienung RC7 KNX**	Accessory
	4007841593018	**Service Fernbedienung RC6 KNX**	Accessory
	4007841009151	**Smart Remote**	Accessory

ORDERING INFORMATION

Art.-Nr.	4007841058517
EAN	4007841058517
E-Number	535935708
Typ	**IR Quattro SLIM XS KNX - round**

nevalux AG
Neugrütstrasse 2
8610 Uster
+41 44 508 78 78
info@nevalux.swiss