RS PRO LED B1 emergency light

SENSOR-SWITCHED INDOOR LIGHT

EAN 4007841066000
E-Nr. 941003449

- Including STEINEL LED system
- Intelligent LED cooling system
- Emergency light module in compliance with EN 60598-2-22
- High-quality aluminium
- Interconnectable by cable

300 x 71 mm



RS PRO LED B1 emergency light

SENSOR-SWITCHED INDOOR LIGHT

EAN 4007841066000
E-Nr. 941003449

Technical Data

DIMENSIONS

Dimensions Ø × H	300 x 71 mm

ELECTRICAL

Mains connection	230 V / 50 – 60 Hz
Power	13,5 W
Own consumption	82 W

SENSOR TECHNOLOGY

Sensor technology	High frequency
Transmission power	< 1 mW
HF technology	5,8 GHz
With motion detector	Yes
Detection	also through glass, wood and stud walls
Detection angle	360 °
Opening angle	160 °
Segment-by-segment masking	Yes
Electronic scalability	Yes
Mechanical scalability	No
Radial range	Ø 8 m (50 m²)

CONNECTIVITY

Networking	Yes
Type of networking	Master/Slave, Master/Master

LIGHTING TECHNOLOGY

Colour temperature	3000 K
LED colour deviation	SDCM3
Colour rendering index	80 - 89
With illuminant	Yes, STEINEL LED system
Illuminant	LED cannot be replaced
Base	without
LED cooling system	Active Thermo Control
Soft light start	No
Continuous light	selectable
Efficiency without cover	81 lm/W
Luminous flux emergency light	21 lm
Luminous flux	1102 lm

LIFETIME

LED lifetime max. °C	50000 h
Luminous flux decline per LM80	L70B10

SETTINGS

Twilight switch	Yes
Twilight setting	2 – 2000 lx
Time setting	5 s – 15 min
Base light function	No
Functions	Emergency light in compliance with EN 60598-2-22 for 3h
Settings via	Potentiometers
With remote control	No

HOUSING & MATERIAL

Impact resistance	IK07
Protection class (IP)	IP20
Protection class	II
Ambient temperature	0...+40 °C
Housing material	Aluminium
Cover material	Opal PC

SCOPE OF DELIVERY & WARRANTY

Manufacturer warranty	5 years

RS PRO LED B1 emergency light

SENSOR-SWITCHED INDOOR LIGHT

EAN **4007841066000**
E-Nr. **941003449**

Illustrations

TECHNICAL DRAWINGS

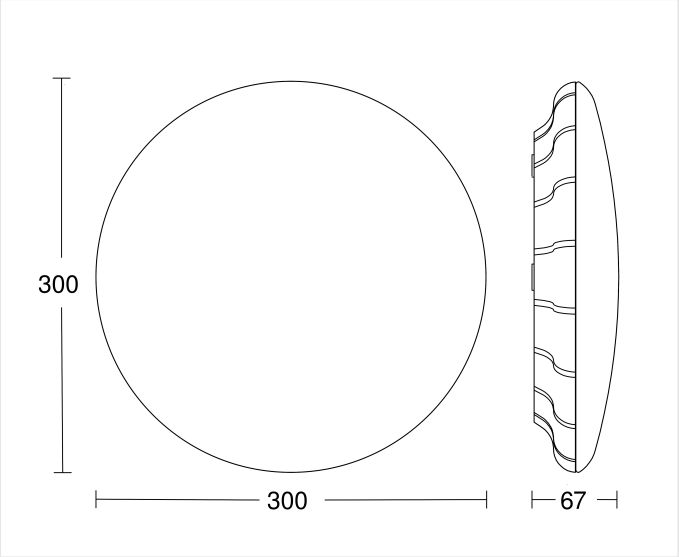

300 x 71 mm

RS PRO LED B1 emergency light

SENSOR-SWITCHED INDOOR LIGHT

EAN **4007841066000**
E-Nr. **941003449**

Wiring Diagrams

WIRING DIAGRAM 1

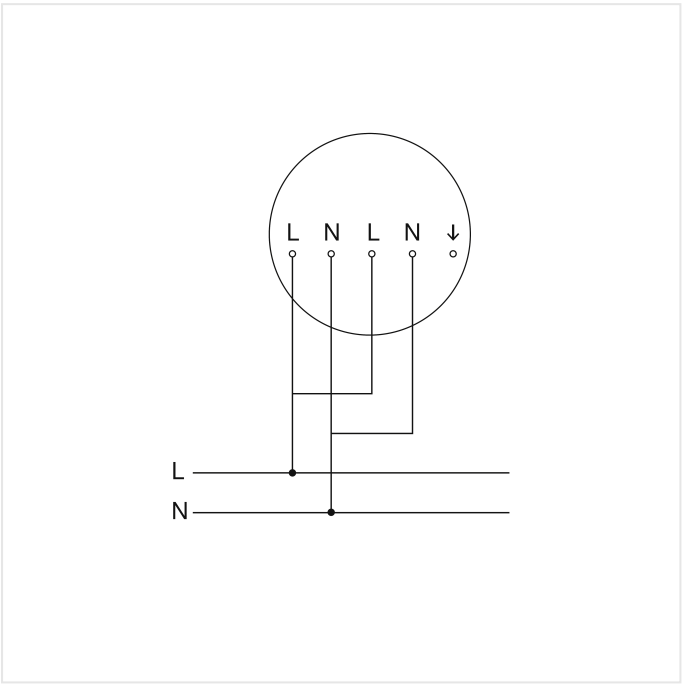

Schaltplan Master

WIRING DIAGRAM 2

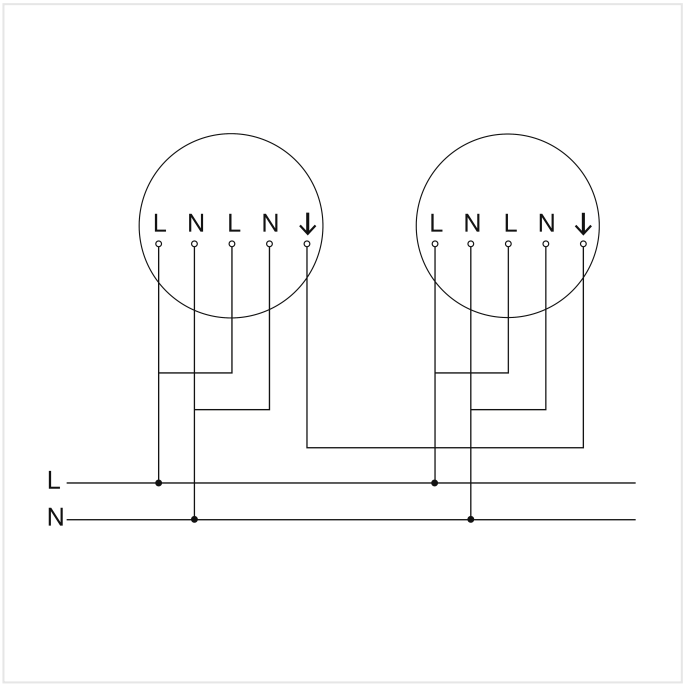

Schaltplan Master-Master Vernetzung

RS PRO LED B1 emergency light

SENSOR-SWITCHED INDOOR LIGHT

EAN **4007841066000**
E-Nr. **941003449**

Accessories

ORDERING INFORMATION

Art.-Nr.	4007841066000
EAN	4007841066000
E-Number	941003449
Typ	**RS PRO LED B1 emergency light**

nevalux AG
Neugrütstrasse 2
8610 Uster
+41 44 508 78 78
info@nevalux.swiss