Hallway KNX - Concealed wiring

PRESENCE DETECTOR

EAN 4007841058036
E-Nr. 535930021

- UV-resistant plastic

steinel

65 x 103 x 103 mm



Hallway KNX - Concealed wiring

PRESENCE DETECTOR

EAN **4007841058036**
E-Nr. **535930021**

Technical Data

IDENTIFICATION

Variant	**KNX**
Version	**Presence detector**

DIMENSIONS

Dimensions L × W × H	**65 x 103 x 103 mm**

ELECTRICAL

Mains connection	**21 – 30 V**
Own consumption	**0,7 W**
Supply voltage detail	**KNX bus**
FIL_2_PRO interfaces	**KNX**

SENSOR TECHNOLOGY

Sensor technology	**High frequency**
HF technology	**5,8 GHz**
Detection	**also through glass, wood and stud walls**
Detection angle	**360 °**
Opening angle	**140 °**
Sneak-under protection	**Yes**
Segment-by-segment masking	**No**
Electronic scalability	**Yes**
Mechanical scalability	**No**
Radial range	**25 x 3 m (75 m²)**
Tangential range	**25 x 3 m (75 m²)**
Mounting height	**2,0 – 4,0 m**
Optimal mounting height	**2,8 m**
FIL_4_PRO sensor technology	**High frequency**

CONNECTIVITY

Networking	**Yes**
Type of networking	**Master/Slave, Master/Master**
KNX functions	**Comfort, Photo-cell controller, Individual pyro evaluation, Basic light level function, Light level, HVAC output, Constant-lighting control, Light output 4x, Presence output, Day / night function, Dewpoint, Logic gate**
With bus coupler	**Yes**
Control technology	**Steinel Connect**
Wireless networking via	**BT Open Mesh**
Networking via	**KNX**

LIGHTING TECHNOLOGY

Constant light regulation	**Yes**

SETTINGS

Twilight setting	**10 – 1000 lx**
Time setting	**10 s – 1092 min**
Base light function	**Yes**
Settings via	**ETS software, App, Bluetooth**
With remote control	**No**
Twilight setting teach	**Yes**

HOUSING & MATERIAL

Protection class (IP)	**IP20**
Ambient temperature	**-25...+50 °C**
Mounting location	**ceiling**
Application location	**Indoors**
Mounting type	**Concealed mounting**
Material	**Plastic**
Colour	**White**
RAL colour	**9010**

SCOPE OF DELIVERY & WARRANTY

Manufacturer warranty	**5 years**

OTHER

Application, location, room	**Indoors, corridor / aisle**

Hallway KNX - Concealed wiring

PRESENCE DETECTOR

EAN **4007841058036**
E-Nr. **535930021**

Illustrations

TECHNICAL DRAWINGS

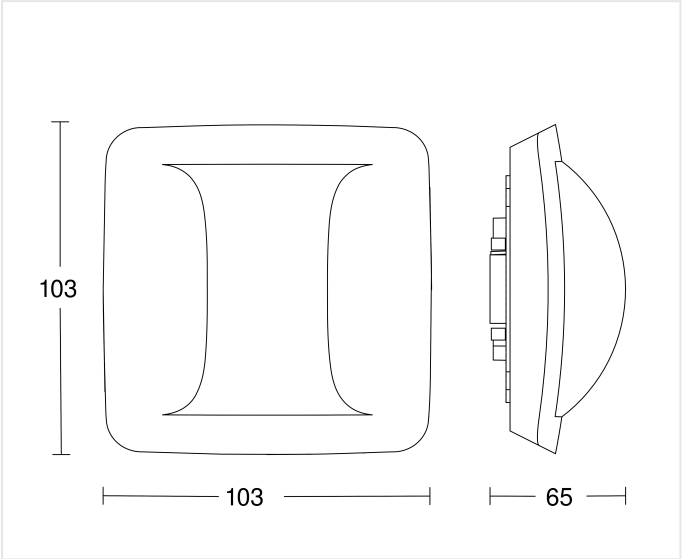

65 x 103 x 103 mm

MOUNTING HEIGHT

2,0 – 4,0 m BEREICH	2,8 m OPTIMAL

Hallway KNX - Concealed wiring

PRESENCE DETECTOR

EAN **4007841058036**
E-Nr. **535930021**

Accessories

	ARTICLE NUMBER	DESCRIPTION	CATEGORY
	4007841056353	**Multisensor True Presence KNX weiss**	Multisensor
	4007841056346	**Multisensor Air KNX**	Multisensor
	4007841056339	**True Presence KNX - Unterputz weiss**	Presence detector

ORDERING INFORMATION

Art.-Nr.	4007841058036
EAN	4007841058036
E-Number	535930021
Typ	**Hallway KNX - Concealed wiring**

neva
lux

nevalux AG
Neugrütstrasse 2
8610 Uster
+41 44 508 78 78
info@nevalux.swiss