iHF 3D KNX - white

MOTION DETECTOR

EAN 4007841059644
E-Nr. 535945073

- Control unit for adjusting the detection zone along 3 axes
- Control dials behind the designer trim panel
- iHF sensor protected in enclosure
- UV-resistant plastic

steinel

120 x 117 x 120 mm



iHF 3D KNX - white

MOTION DETECTOR

EAN 4007841059644
E-Nr. 535945073

Technical Data

IDENTIFICATION

Version	Motion detectors

DIMENSIONS

Dimensions L × W × H	120 x 117 x 120 mm

ELECTRICAL

Supply voltage detail	KNX bus

SENSOR TECHNOLOGY

Max. mounting height	2,00 m
Sensor technology	iHF (intelligent high-frequency technology)
Transmission power	< 1 mW
HF technology	5,8 GHz
With motion detector	Yes
Detection angle	160 °
Opening angle	100 °
Sneak-under protection	Yes
Segment-by-segment masking	Yes
Electronic scalability	Yes
Mechanical scalability	No
Range detail	Detection zone adjustable on 3 axes
Radial range	r = 5 m (35 m²)
Tangential range	r = 5 m (35 m²)
Mounting height	1,8 – 2,0 m
Optimal mounting height	1,8 m

CONNECTIVITY

Networking	Yes
Type of networking	Master/Slave, Master/Master
KNX functions	Photo-cell controller\nBasic light level function\nLight level\nLight output 2x\nPresence output\nDay / night function\nLogic gate\nDirection of movement\nDistance\nSabotage protection
With bus coupler	Yes
Networking via	KNX bus

LIGHTING TECHNOLOGY

Soft light start	Yes
Continuous light	selectable
Constant light regulation	No

SETTINGS

Twilight switch	Yes
Twilight setting	10 – 2000 lx
Time setting	10 s – 1092 min
Base light function	Yes
Base light function time	10s - 18h 12min 15s
Main light adjustable	0 - 100 %
Functions	Presence detector logic
Settings via	ETS software, Bus, Bluetooth, App, Potentiometers, Smartphone
Twilight setting teach	Yes
Base light function in percent	0 – 100 %
Base light function percent from	0 %

HOUSING & MATERIAL

Protection class (IP)	IP54
Ambient temperature	-20...+50 °C
Housing material	Plastic
Mounting location	Wall
Application location	Outdoors
Mounting type	Surface mounting
Material	Plastic
Application room	all round the building, courtyard & driveway, front door, outdoors, terrace / balcony
Colour	White
RAL colour	9010

SCOPE OF DELIVERY & WARRANTY

Manufacturer warranty	5 years
Corner wall bracket included	No

iHF 3D KNX - white

MOTION DETECTOR

EAN 4007841059644
E-Nr. 535945073

Illustrations

TECHNICAL DRAWINGS

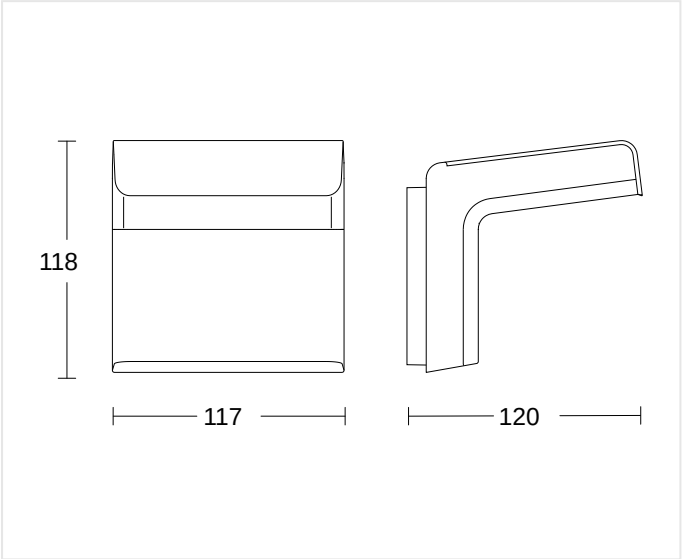

120 x 117 x 120 mm

MOUNTING HEIGHT

1,8 – 2,0 m	1,8 m	2,00 m
BEREICH	OPTIMAL	MAX

iHF 3D KNX - white

MOTION DETECTOR

EAN **4007841059644**
E-Nr. **535945073**

Accessories

ORDERING INFORMATION

Art.-Nr.	4007841059644
EAN	4007841059644
E-Number	535945073
Typ	**iHF 3D KNX - white**

nevalux AG
Neugrütstrasse 2
8610 Uster
+41 44 508 78 78
info@nevalux.swiss