iHF 3D COM1 - anthracite

MOTION DETECTOR

EAN 4007841066178
E-Nr. 535941008

- Control unit for adjusting the detection zone along 3 axes
- Control dials behind the designer trim panel
- iHF sensor protected in enclosure
- UV-resistant plastic

steinel

120 x 117 x 120 mm



iHF 3D COM1 - anthracite

MOTION DETECTOR

EAN 4007841066178
E-Nr. 535941008

Technical Data

IDENTIFICATION

Version	Motion detectors

DIMENSIONS

Dimensions L × W × H	120 x 117 x 120 mm

ELECTRICAL

Mains connection	230 V / 50 – 60 Hz
Switching output 1 resistive	2000 W

SENSOR TECHNOLOGY

Max. mounting height	2,00 m
Sensor technology	iHF (intelligent high-frequency technology)
Transmission power	< 1 mW
HF technology	5,8 GHz
With motion detector	Yes
Detection angle	160 °
Opening angle	100 °
Sneak-under protection	Yes
Segment-by-segment masking	Yes
Electronic scalability	Yes
Mechanical scalability	No
Range detail	Detection zone adjustable on 3 axes
Radial range	r = 5 m (35 m²)
Tangential range	r = 5 m (35 m²)
Mounting height	1,8 – 2,0 m
Optimal mounting height	1,8 m

CONNECTIVITY

Networking	Yes
Type of networking	Master/Master
Networking via	Cable, Bluetooth

LIGHTING TECHNOLOGY

Soft light start	No
Continuous light	selectable, 4h
Constant light regulation	No

SETTINGS

Twilight switch	Yes
Twilight setting	2 – 2000 lx
Time setting	5 s – 60 min
Base light function	No
Main light adjustable	No
Functions	Normal / test mode, Manual ON / ON-OFF
Settings via	Potentiometers, Bluetooth
With remote control	No
Twilight setting teach	Yes

HOUSING & MATERIAL

Protection class (IP)	IP54
Ambient temperature	-20...+50 °C
Housing material	Plastic
Mounting location	Wall
Application location	Outdoors
Mounting type	Surface mounting
Material	Plastic
Application room	all round the building, courtyard & driveway, front door, outdoors, terrace / balcony
Colour	Anthracite
RAL colour	7016

SCOPE OF DELIVERY & WARRANTY

Manufacturer warranty	5 years
Corner wall bracket included	No

iHF 3D COM1 - anthracite

MOTION DETECTOR

EAN **4007841066178**
E-Nr. **535941008**

Illustrations

TECHNICAL DRAWINGS

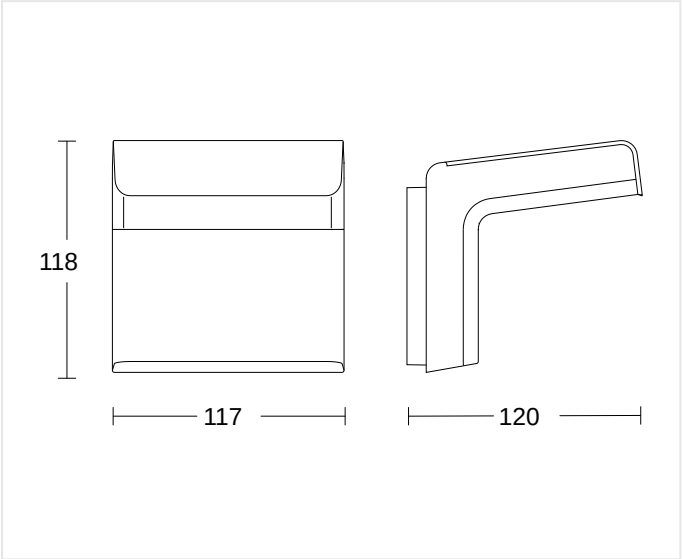

120 x 117 x 120 mm

MOUNTING HEIGHT

1,8 – 2,0 m	1,8 m	2,00 m
BEREICH	OPTIMAL	MAX

iHF 3D COM1 - anthracite

MOTION DETECTOR

EAN 4007841066178
E-Nr. 535941008

Wiring Diagrams

WIRING DIAGRAM 1

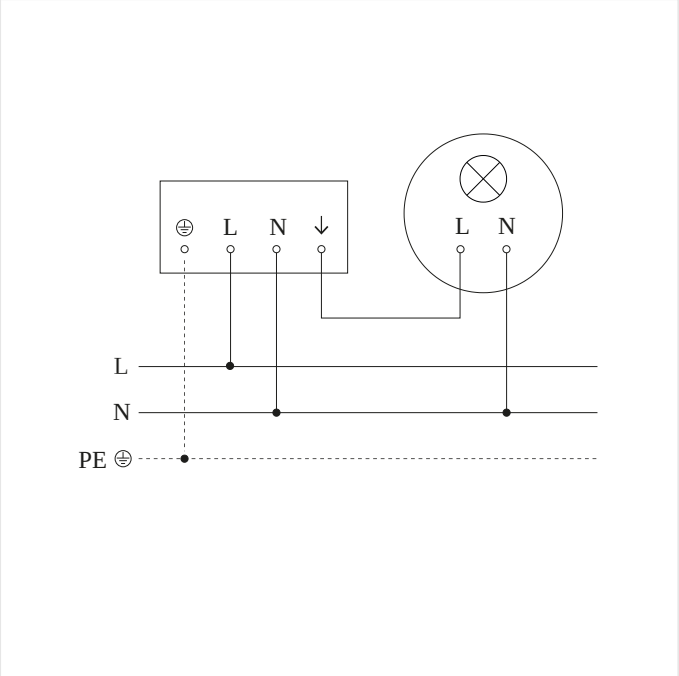

Master circuit diagram

iHF 3D COM1 - anthracite

MOTION DETECTOR

EAN **4007841066178**
E-Nr. **535941008**

Accessories

ORDERING INFORMATION

Art.-Nr.	4007841066178
EAN	4007841066178
E-Number	535941008
Typ	**iHF 3D COM1 - anthracite**

nevalux AG
Neugrütstrasse 2
8610 Uster
+41 44 508 78 78
info@nevalux.swiss