iHF 3D COM1 - white

MOTION DETECTOR

EAN 4007841066222
E-Nr. 535941208

- Control unit for adjusting the detection zone along 3 axes
- Control dials behind the designer trim panel
- iHF sensor protected in enclosure
- UV-resistant plastic

steinel

120 x 117 x 120 mm



iHF 3D COM1 - white

MOTION DETECTOR

EAN **4007841066222**
E-Nr. **535941208**

Technical Data

IDENTIFICATION

Version	**Motion detectors**

DIMENSIONS

Dimensions L × W × H	**120 x 117 x 120 mm**

ELECTRICAL

Mains connection	**230 V / 50 – 60 Hz**
Switching output 1 resistive	**2000 W**

SENSOR TECHNOLOGY

Max. mounting height	**2,00 m**
Sensor technology	**iHF (intelligent high-frequency technology)**
Transmission power	**< 1 mW**
HF technology	**5,8 GHz**
With motion detector	**Yes**
Detection angle	**160 °**
Opening angle	**100 °**
Sneak-under protection	**Yes**
Segment-by-segment masking	**Yes**
Electronic scalability	**Yes**
Mechanical scalability	**No**
Range detail	**Detection zone adjustable on 3 axes**
Radial range	**r = 5 m (35 m²)**
Tangential range	**r = 5 m (35 m²)**
Mounting height	**1,8 – 2,0 m**
Optimal mounting height	**1,8 m**

CONNECTIVITY

Networking	**Yes**
Type of networking	**Master/Master**
Networking via	**Cable, Bluetooth**

LIGHTING TECHNOLOGY

Soft light start	**No**
Continuous light	**selectable, 4h**
Constant light regulation	**No**

SETTINGS

Twilight switch	**Yes**
Twilight setting	**2 – 2000 lx**
Time setting	**5 s – 60 min**
Base light function	**No**
Main light adjustable	**No**
Functions	**Normal / test mode, Manual ON / ON-OFF**
Settings via	**Potentiometers, Bluetooth**
With remote control	**No**
Twilight setting teach	**Yes**

HOUSING & MATERIAL

Protection class (IP)	**IP54**
Ambient temperature	**-20...+50 °C**
Housing material	**Plastic**
Mounting location	**Wall**
Application location	**Outdoors**
Mounting type	**Surface mounting**
Material	**Plastic**
Application room	**all round the building, courtyard & driveway, front door, outdoors, terrace / balcony**
Colour	**White**
RAL colour	**9010**

SCOPE OF DELIVERY & WARRANTY

Manufacturer warranty	**5 years**
Corner wall bracket included	**No**

iHF 3D COM1 - white

MOTION DETECTOR

EAN **4007841066222**
E-Nr. **535941208**

Illustrations

TECHNICAL DRAWINGS

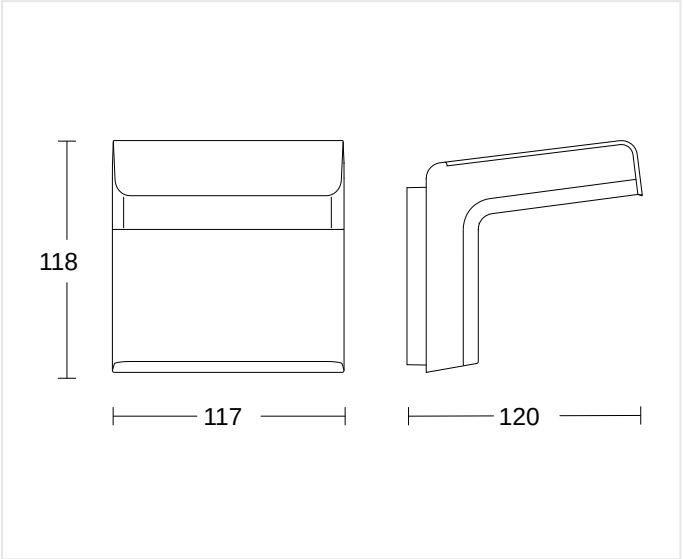

120 x 117 x 120 mm

MOUNTING HEIGHT

1,8 – 2,0 m	1,8 m	2,00 m
BEREICH	OPTIMAL	MAX

iHF 3D COM1 - white

MOTION DETECTOR

EAN 4007841066222
E-Nr. 535941208

Wiring Diagrams

WIRING DIAGRAM 1

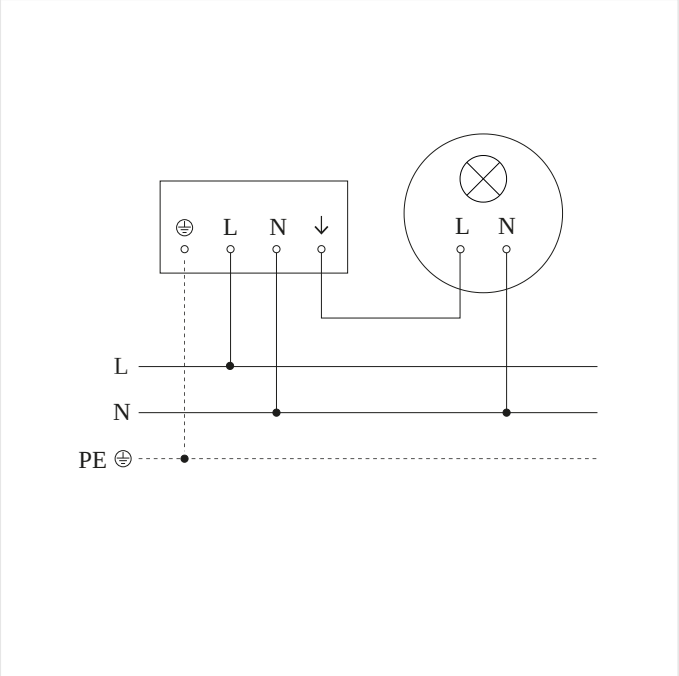

Master circuit diagram

iHF 3D COM1 - white

MOTION DETECTOR

EAN **4007841066222**
E-Nr. **535941208**

Accessories

ORDERING INFORMATION

Art.-Nr.	4007841066222
EAN	4007841066222
E-Number	535941208
Typ	**iHF 3D COM1 - white**

nevalux AG
Neugrütstrasse 2
8610 Uster
+41 44 508 78 78
info@nevalux.swiss