XLED PRO 240 S Neutral white white

SENSOR-SWITCHED LED FLOODLIGHT

EAN 4007841068370
E-Nr. 941502199

- Including STEINEL LED system
- HCMC cooling system
- UV-resistant plastic
- Colour rendering index Ra ≥80
- Optional corner wall mount bracket
- Interconnectable by cable (maximum of 10 units)

steinel

161 x 180 x 223 mm



XLED PRO 240 S Neutral white white

SENSOR-SWITCHED LED FLOODLIGHT

EAN **4007841068370**
E-Nr. **941502199**

Technical Data

DIMENSIONS

Dimensions L × W × H	**161 x 180 x 223 mm**

ELECTRICAL

Mains connection	**230 V / 50 – 60 Hz**
Power	**19,3 W**

SENSOR TECHNOLOGY

Max. mounting height	**6,00 m**
Sensor technology	**passive infrared**
With motion detector	**Yes**
Opening angle	**180 °**
Sneak-under protection	**Yes**
Segment-by-segment masking	**Yes**
Electronic scalability	**No**
Mechanical scalability	**No**
Radial range	**r = 3 m (19 m²)**
Tangential range	**r = 12 m (302 m²)**
Mounting height	**1,8 – 6,0 m**
Optimal mounting height	**2,0 m**

CONNECTIVITY

Networking	**Yes**
Networking quantity	**maximum of 10 floodlights**
Networking via	**Cable**

LIGHTING TECHNOLOGY

Measured luminous flux 360°	**2124 lm**
Colour temperature	**4000 K**
LED colour deviation	**SDCM3**
With illuminant	**Yes, STEINEL LED system**
Illuminant	**LED cannot be replaced**
Base	**without**
LED cooling system	**HCMC (High Conductive Magnesium Composite)**
Soft light start	**No**
Continuous light	**schaltbar**

LIFETIME

LED lifetime L70B50 25°C	**> 60000 h**

SETTINGS

Twilight switch	**Yes**
Twilight setting	**2 – 2000 lx**
Time setting	**10 s – 15 min**
Base light function	**No**
Main light adjustable	**No**
Settings via	**Potentiometers**
Twilight setting teach	**No**

HOUSING & MATERIAL

Impact resistance	**IK03**
Protection class (IP)	**IP44**
Protection class	**II**
Ambient temperature	**-20...+40 °C**
Housing material	**HCMC**
Cover material	**Opal plastic**
Cover material (scope of delivery)	**Cover clips**
Mounting location	**corner, wall**
Application location	**Outdoors**
Mounting type	**Surface mounting**
Application room	**Aussenbereich, Rund ums Haus, Terrasse / Balkon, Hof & Einfahrt**
Colour	**White**

SCOPE OF DELIVERY & WARRANTY

Manufacturer warranty	**5 years**
Corner wall bracket included	**No**

CERTIFICATES & EPREL

EPREL category	**Light source**

XLED PRO 240 S Neutral white white

SENSOR-SWITCHED LED FLOODLIGHT

EAN **4007841068370**
E-Nr. **941502199**

Illustrations

TECHNICAL DRAWINGS

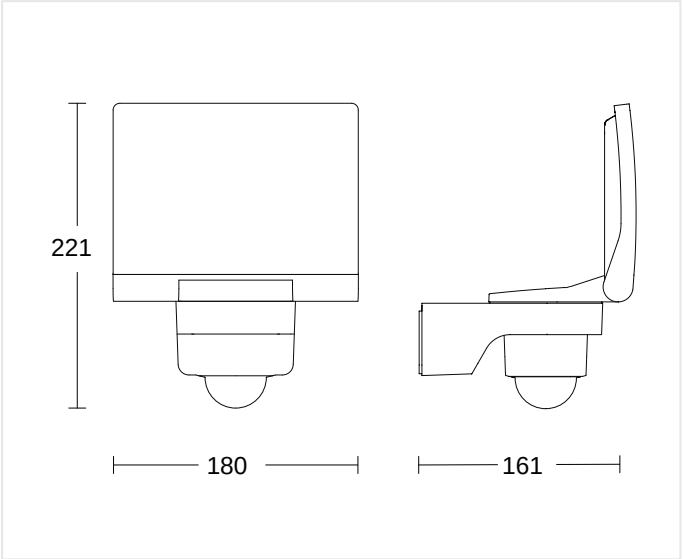

161 x 180 x 223 mm

MOUNTING HEIGHT

1,8 – 6,0 m	2,0 m	6,00 m
BEREICH	OPTIMAL	MAX

XLED PRO 240 S Neutral white white

SENSOR-SWITCHED LED FLOODLIGHT

EAN **4007841068370**
E-Nr. **941502199**

Wiring Diagrams

WIRING DIAGRAM 1

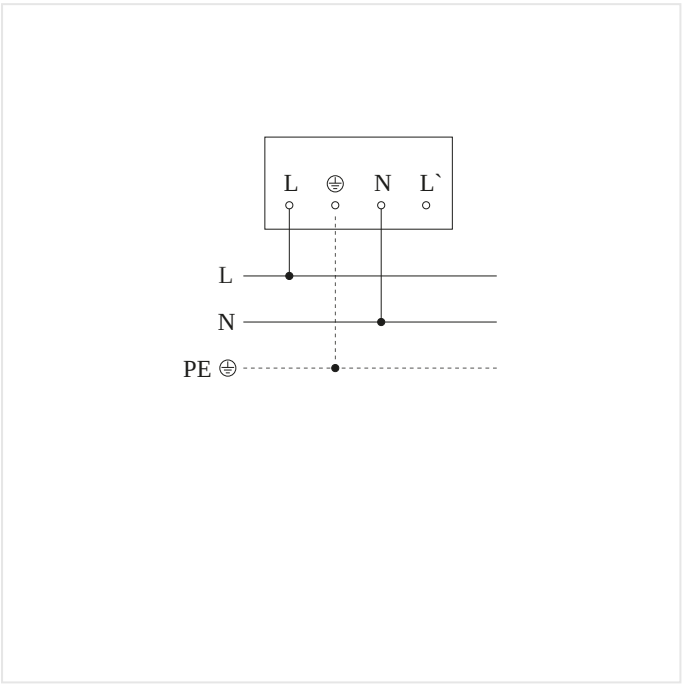

Master circuit diagram

WIRING DIAGRAM 2

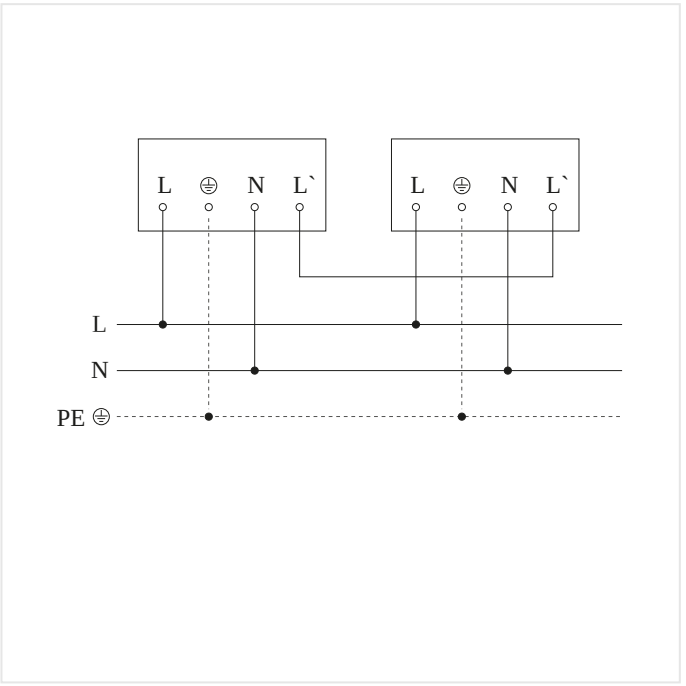

Master/master interconnection circuit diagram

XLED PRO 240 S Neutral white white

SENSOR-SWITCHED LED FLOODLIGHT

EAN **4007841068370**
E-Nr. **941502199**

Accessories

ORDERING INFORMATION

Art.-Nr.	4007841068370
EAN	4007841068370
E-Number	941502199
Typ	**XLED PRO 240 S Neutral white white**

neva lux

nevalux AG
Neugrütstrasse 2
8610 Uster
+41 44 508 78 78
info@nevalux.swiss