Multisensor Aerosol KNX

MULTISENSOR

EAN 4007841079192
E-Nr. 535932708

- UV-resistant plastic

steinel

33 x 123 x 123 mm



Multisensor Aerosol KNX

MULTISENSOR

EAN 4007841079192
E-Nr. 535932708

Technical Data

IDENTIFICATION

Version	Other

DIMENSIONS

Dimensions L × W × H	33 x 123 x 123 mm

ELECTRICAL

Mains connection	21 – 30 V
Own consumption	0,5 W
Supply voltage detail	KNX bus

SENSOR TECHNOLOGY

Sensor technology	Multisensor
With motion detector	No
Optimal mounting height	2,8 m

CONNECTIVITY

Networking	Yes
KNX functions	Risk of infection\nUdes air\nComfort\nCO2\nLight level\nHVAC output\nLogic gate\nAir pressure\nHumidity output\nDay / night function\nDewpoint\nTemperature output\nVOC
With bus coupler	Yes
Networking via	KNX bus

LIGHTING TECHNOLOGY

Continuous light	selectable
Constant light regulation	No

SETTINGS

Twilight switch	Yes
Twilight setting	2 – 1000 lx
Settings via	ETS software, App, Bluetooth
With remote control	No
Twilight setting teach	Yes

HOUSING & MATERIAL

Protection class (IP)	IP20
Ambient temperature	0...+40 °C
Mounting location	ceiling
Application location	Indoors
Mounting type	Concealed mounting
Material	Plastic
Application room	Indoors, classroom, conference room / meeting room, duty room, kitchenette, lecture hall, one-person office, recreation room
Colour	White
RAL colour	9003

SCOPE OF DELIVERY & WARRANTY

Manufacturer warranty	5 years
Corner wall bracket included	No

Multisensor Aerosol KNX

MULTISENSOR

EAN 4007841079192
E-Nr. 535932708

Illustrations

TECHNICAL DRAWINGS

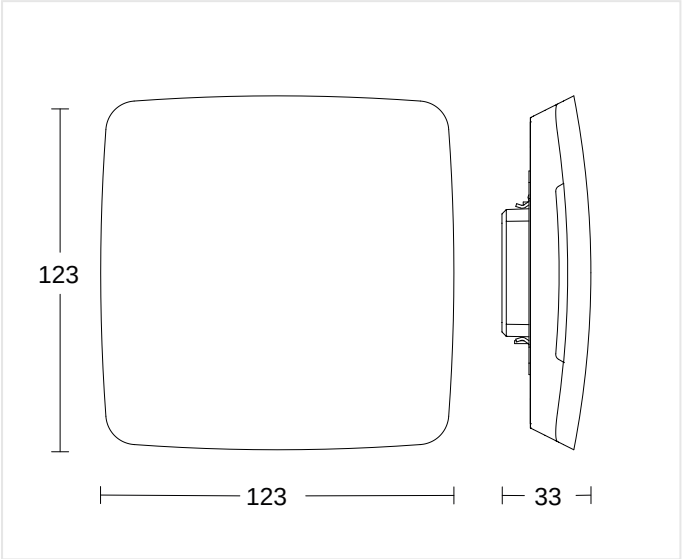

33 x 123 x 123 mm

MOUNTING HEIGHT

2,8 m

OPTIMAL

Multisensor Aerosol KNX

MULTISENSOR

EAN 4007841079192
E-Nr. 535932708

Accessories

	ARTICLE NUMBER	DESCRIPTION	CATEGORY
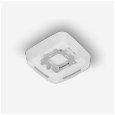	4007841063870	**Aufputz Adapter Multisensor weiss**	Accessory

ORDERING INFORMATION

Art.-Nr.	4007841079192
EAN	4007841079192
E-Number	535932708
Typ	**Multisensor Aerosol KNX**

neva lux

nevalux AG
Neugrütstrasse 2
8610 Uster
+41 44 508 78 78
info@nevalux.swiss